Bang & Olufsen

QA 01.

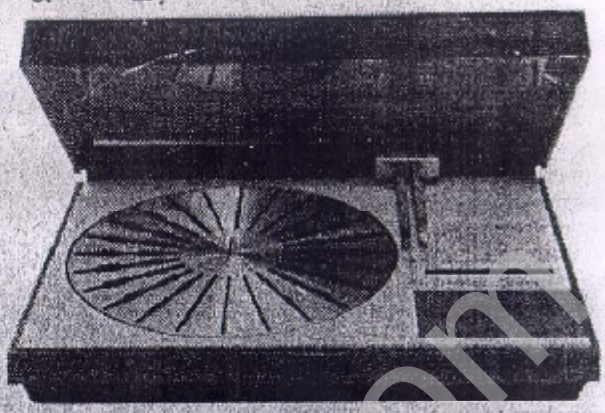

# BEOGRAM 4002

TYPE 5513

# BEOGRAM 4002-4004

TYPE 5523-5526

USA

## SERVICE MANUAL

## INTRODUCTION

This service manual comprises Beogram 4002, type 5513, which have been constructed on the basis of type 5503.
In the diagrams the components are provided with an individual position number and a co-ordinate designation, e.g. B3. This designation refers to the placing on the PC boards which are provided with a printed division into fields and with letters and figures along the edge of the PC board. Therefore there are no drawings of the PC boards in the service manual. The diagram for the CD-4 demodulator shows only one of the stereo channels and the co-ordinate designation for right channel is bracketed, e.g. B3 (C2).
The diagrams, which may be unfolded, are placed at the back of the manual so that it is possible to open at the preceding pages at the same time.
The service manual is complete and contains the paragraphs mentioned in the below table of contents. Supplementary sheets will only be made in case of essential changes.

BeoCollectors.com

CONTENTS SEC.

Technical data - Disassembly ..... 1
Electrical description ..... 2
Mechanical adjustments - Lubrication chart ..... 3
Electrical adjustment ..... 4
Fault-finding ..... 5
Mechanical parts list ..... 6
Diagram - Electrical parts list - Conditions of measurement ..... 7
Service tips ..... 8

Bang & Olufsen

## TECHNICAL DATA

| | BEOGRAM 4002 |
|---|---|
| Type No. | 5513 |
| Sound system | Stereo, matrix |
| Output | 2 x 0,6 mV |
| Speeds | 33 - 45 rpm. |
| Tonearm | Tangential |
| Automatic record-size | Yes |
| Automatic pickup movement | Yes |
| Automatic speed selection | Yes |
| Wow and flutter, DIN | < ± 0.05% |
| Wow and flutter, WRMS | < ± 0.025% |
| Rumble DIN unweighted | > 45 dB |
| Rumble DIN weighted | > 65 dB |
| Speed deviation | < 0.02% |
| Speed control range | > 6% |
| Dial for speed | 2 pointers |
| Stylus pressure range | 0 - 1.5 gram |
| Tangential tracking | < 0.04° |
| Lift system | Electronic |
| Antiskating | Parallel tracking, error angle compensated |
| Motor | Servo controlled DC |
| Drive system | Belt |
| Turntable | 30 cm 1.3 kg |
| Dust cover | Hinged and detachable |
| Power supply | 117 volts |
| Frequency | 50 - 60 Hz |
| Power consumption | 20 watts |
| Dimensions W x H x D | 49 x 10 x 38 cm |
| Weight | 11 kg |
| Pickup | MMC 6000 |
| Stylus | Pramanik diamond |
| Radius of curvature | (CD-4 quadro) |
| Frequency range | 20 - 15,000 Hz ± 1.5 dB |
| | 20 - 45,000 Hz (CD-4) |
| Channel separation 1000 Hz | > 25 dB |
| 400 - 10,000 Hz | > 20 dB |
| Channel difference | < 1.5 dB |
| Intermodulation | < 1% |
| Recommended stylus pressure | 1 gram |
| Compliance | 30 x $10^{-6}$ cm/dyn |
| Effective tip mass | 0,22 mg |
| Output mV/cm/sec. | 0.6 mV/47 kohms |
| Subject to change without notice | |

## DISASSEMBLY

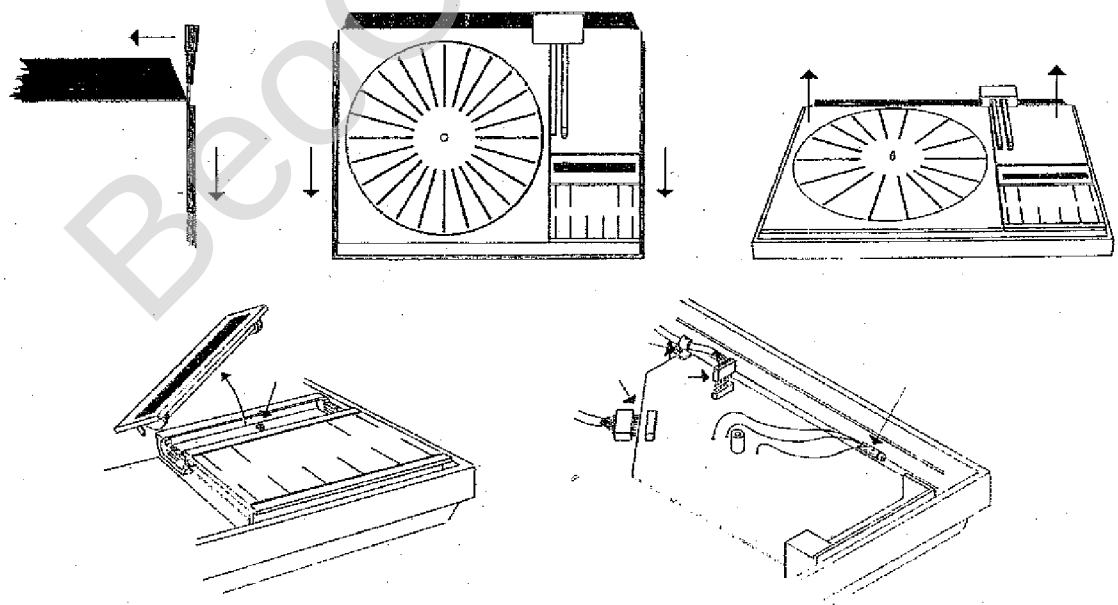

BeoCollectors.com

## ELECTRICAL DESCRIPTION

Since the circuitry of the Beogram 4002 - 6000 type 551x is basically identical with that of the type 550x, the electrical description will give chief attention to those circuits which are fundamentally different.

### Record wiping

With 33 activated in the STAND BY mode, the turntable will rotate but the slide will not travel in, making record wiping possible.

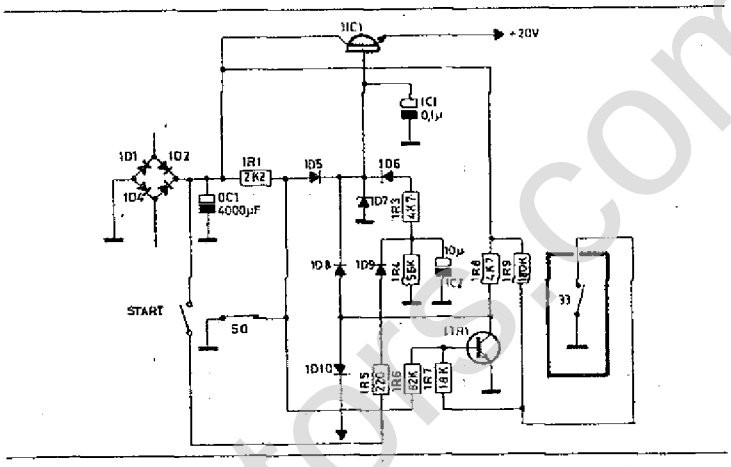


In the STAND BY mode, 1TR1 is kept forward biased through 1R9, 1R7 and 1R6. If 33 is activated, the junction of 1R9 and 1R7 is connected to chassis potential. 1TR1 is reverse biased, the collector goes high; this level is transmitted through 1D8 to the base of series transistor 1IC1 as forward bias, with the result that voltage is available from the power supply section. The high level is likewise transmitted to the electronic switch through 1D10, thus blocking the functions of the electronic switch and preventing slide transport.
The turntable will rotate only as long as 33 is activated.

### Tacho control

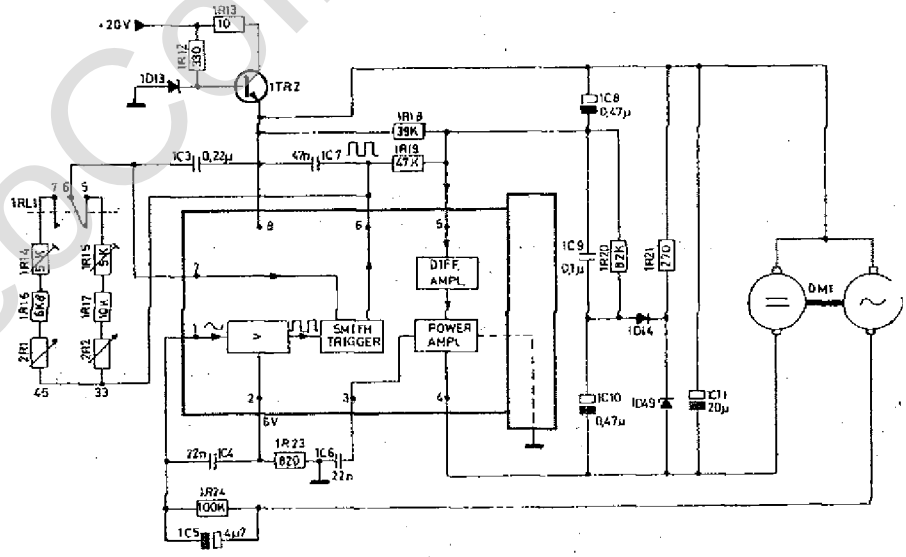


The turntable is driven by a tacho-controlled DC motor. A generator in the motor furnishes an AC voltage whose frequency is dependent on the motor speed.
This AC voltage is fed to the network 1C5 - 1R24 to pin 1 of 1IC3. The AC voltage is converted to a square, which is passed on to a Schmitt trigger.
The frequency of the square, dependent on the motor speed, controls one of

BeoCollectors.com

the output levels of the Schmitt trigger; the other output level is controlled from a variable time constant network consisting of 1C3 - 1R4 - 1R16 - 2R1 for 45 r.p.m. and 1C3 - 1R15 - 1R17 - 2R2 for 33 r.p.m..

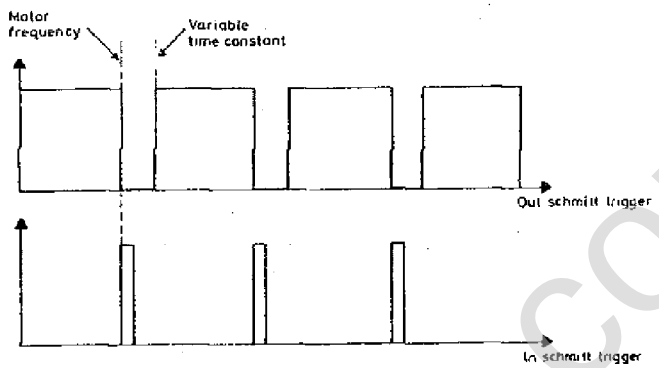


The output signal of the Schmitt trigger (pin 6) is integrated across 1R19 - 1C8 and fed to pin 5 which is a differential amplifier. The integrated signal at 5 will be a DC voltage which varies with the motor speed. This DC voltage is fed via the differential amplifier to a power amplifier. The power amplifier is connected as a variable resistor to chassis potential. 1C10 - 1C9 - 1R20 provides negative feedback for the power amplifier (see sketch), preventing "overregulation".

1D14 - 1D49 - 1R21 provide a guarantee that the voltage across the motor can only reach a certain value (see sketch).

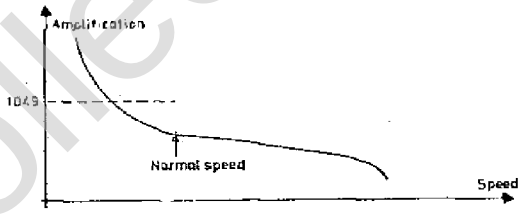


When starting up from motor stand-still, the power amplifier will receive heavy drive to obtain very rapid speed increase. Approx. 8.5V is present at the anode of 1D14 so if the voltage at pin 4 goes below 4.6V, then 1D49, a 3.3V Zener diode, will be forward biased, thus preventing the voltage across the motor from exceeding approx. 4.4V so that the speed increase when starting up will not be so heavy that the motor reaches twice its wanted speed, since the motor regulating circuit is capable of taking hold at twice that speed.

The motor regulating circuit is powered with 9V via the series transistor 1TR2, controlled by 1D13. 1D13 is a 9V Zener diode.

BeoCollector.com

**Automatic speed-change switch, 33 - 45**

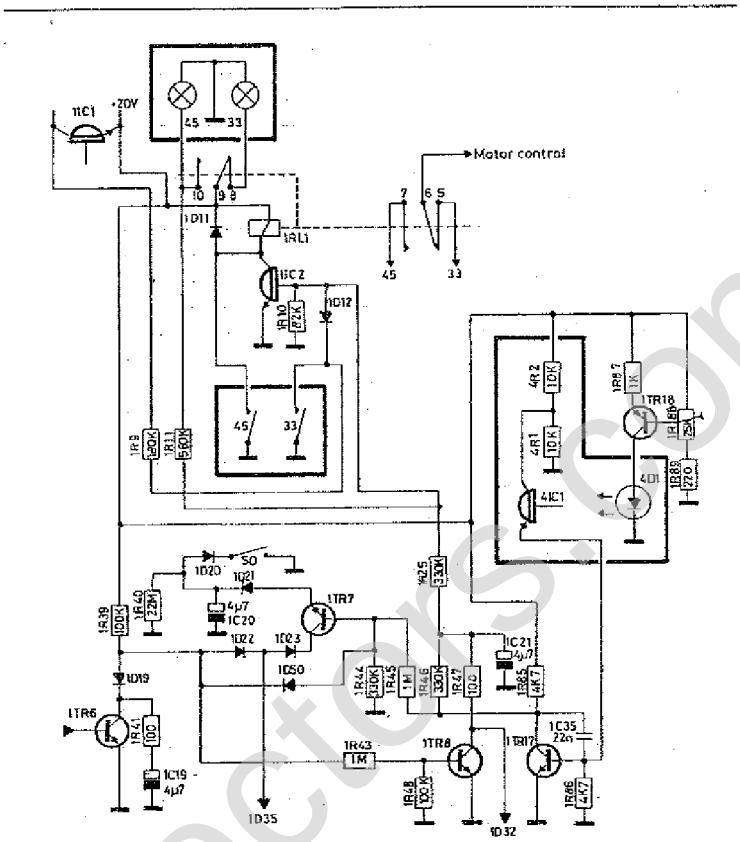


We will assume as our starting point that a 17 cm record is on the turntable.

When ON is activated and the slide begins travelling in, the conditions for lowering the pickup arm are not present.

The collector of 1TR6 will be low. This low level is transmitted to the base of 1TR8 as reverse bias.
The collector of 1TR8 and hence the base of 1IC2 will float, as a result of which 1IC2 will be reverse biased and 1RL1 will be in the neutral position (the 33 r.p.m. position).

When the slide passes the position giver mark for touch-down on 30 cm, 4IC1 and hence 1TR17 are reverse biased, the collector of 1TR17 goes high, which high level will attempt to charge 1C21 of the time constant network 1R46 - 1C21, but since the 30 cm position marker is very narrow, 1C21 cannot obtain a full charge before 4IC1, and consequently 1TR17 are forward biased. Since a 17 cm record is on the turntable, the conditions for lowering the pickup arm are not yet present, and the slide will continue to travel in. The slide reaches the position marker for 25 cm lower - 17 cm speed change, 4IC1 and hence 1TR17 are again reverse biased, this time for a longer time than for 30 cm because the mark for 17 cm speed change is broader than the mark for 30 cm lower.
The high level at 1TR17 can now have time to charge 1C21, 1IC2 is forward biased, 1RL1 operates, and the speed changes to 45 r.p.m..

When the slide reaches the mark for 17 cm lower, and we have a 17 cm record on the turntable, the conditions for lowering the pickup arm are present.
The collector of 1TR6 goes high, which high level is transmitted to the base of 1TR8 as forward bias.
The collector of 1TR8 goes low, and 1IC2 is now kept forward biased through 1RL1, 1R11, 1R25 and 1TR8.

BeoCollectors.com

The collector of 1TR8 is connected via 1D32 to the "Motor control IN" section of the electronic switch so that automatic speed change to 45 r.p.m. can occur only while the slide is travelling in (high at the collector of 1TR12). A low level at the collector of 1TR12 places the cathode of 1D32 on chassis potential, and 1C21 cannot be charged.
When switching manually from 33 to 45 r.p.m., 45 is activated, relay 1RL1 operates, and 1IC2 is forward biased through 1RL1 and 1R11. If 33 is activated, the bias for 1IC2 is shorted to chassis through 1D12, 1IC2 is reverse biased, and 1RL1 releases.

1D12 prevents 1IC2 from being forward biased through 1R9.

1D11 protects against induction peaks.

When the requirements for lowering the pickup have been met, the collector o 1TR6 is high; this high level is transmitted via 1D22 to the LOWER section of the electronic switch as a fixed level at the cathode of 1D35. When the slide switch passes the position giver mark, the collector of 1TR17 as mentioned before goes high; this high level is transmitted to the base of 1TR7 as forward bias. 1C20 will charge through 1D23, 1TR7 and 1D21. The charging current in 1C20 gives a negative voltage jump at the cathode of 1D22. This low pulse is fed to the electronic switch to activate its LOWER section. To ensure that 1C20 will not pick up a charge from the speed-change switch through 1D21 and 1TR7, 1D50 shorts the base of 1TR17 to chassis potential when the collector of 1TR6 is low.

1D19 and the time constant network 1R41 - 1C19 ensure that automatic lowering will not occur when the detector arm reaches in above the bright portion of the turntable (with no record on the turntable).

**Magnet coil circuit**

If a low level is applied to the base of 1TR9, 1TR9 is reverse biased, the collector is high and 1IC4 reverse biased; 0RL1 will be in the neutral position.

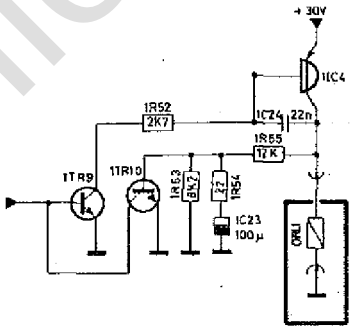


If the base of 1TR9 goes high, 1TR9 is forward biased; the collector goes low, and 1IC4 is likewise forward biased and magnet coil 0RL1 operates. Parts of the collector current of 1IC4 will charge 1C23 across 1R55 and 1R54. When 1C23 is charged to a level of approx. 0.7V, 1TR10 is forward biased. The collector current in 1TR10 will impose a load on the drive to 1TR9. 1TR9 draws less current; this limits the current in 1IC4, and hence the magnet coil, from 4 amps at the moment the magnet coil operates to approx. 150 mA. When 1C23 has accumulated a charge, 1R53 and 1R55 are connected to operate as base bias divider for 1TR10 in such a way that the higher the collector voltage at 1IC4, the higher the forward bias of 1TR10, 1TR10 draws more current, the base of 1TR9 is more heavily loaded, and the collector current in 1IC4 is limited as mentioned above. 1TR10 accordingly provides negative feedback.

BeoCollectors.com

## DEMODULATOR

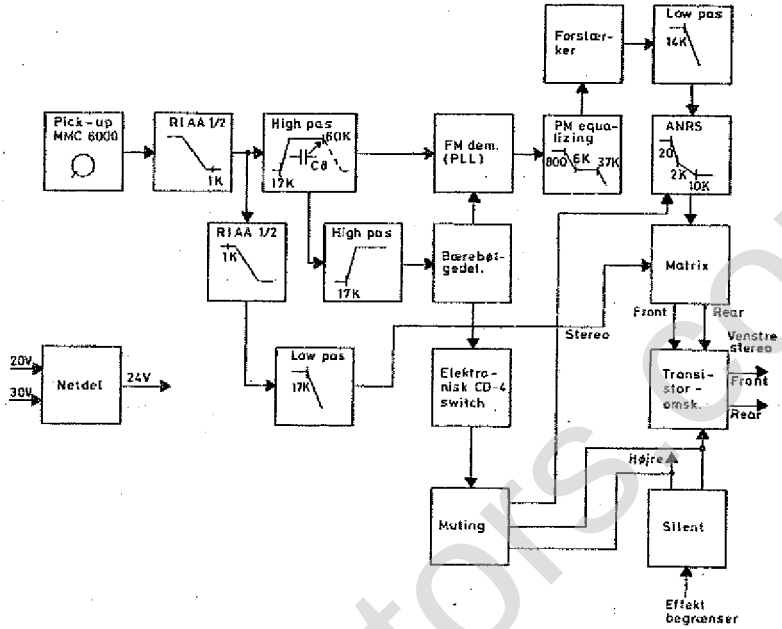


### Power supply

The CD-4 demodulator has a stabilised power supply of its own which uses the power supply of the control circuits as reference.

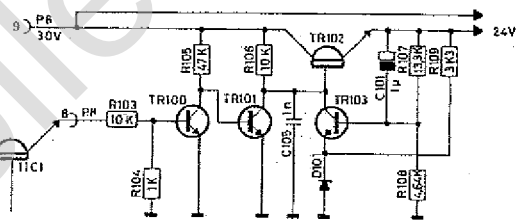


### Carrier detector

The power supply series transistor, TR102, is forward biased by TR101 and TR100, whose base receives 20 V of bias. The emitter voltage of TR102 is stabilised by TR103 and D101.

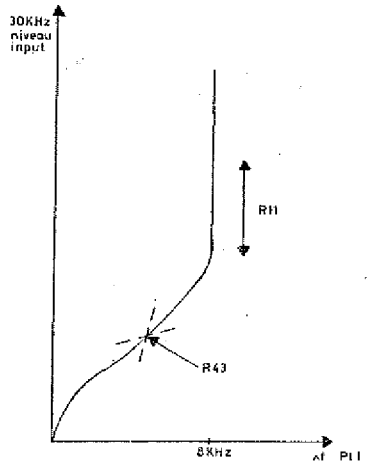


BeoCollectors.com

The carrier detector serves the purpose of limiting the lock-in range of the PLL if 30 kHz carrier drops out. Limiting follows the curve shown, the slope of the curve (level range) being adjusted with R43. R11 is used for selecting the 30 kHz level at which regulation starts.

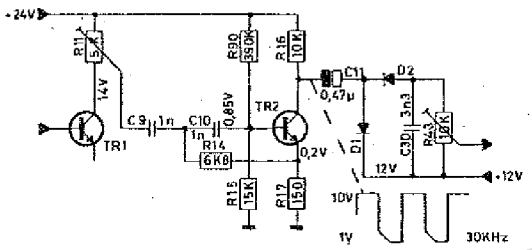


**Matrix**

The matrix serves the purpose of mixing the sum and difference signals in such a manner that the front and rear channels appear separately.

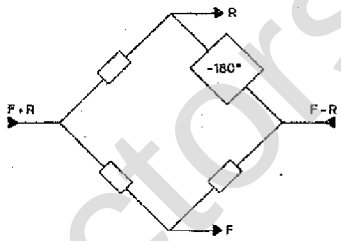


The principle of the matrix is, in one case, to add the two signals together to produce the front signal and, in the other, to subtract them so as to obtain the rear signal.

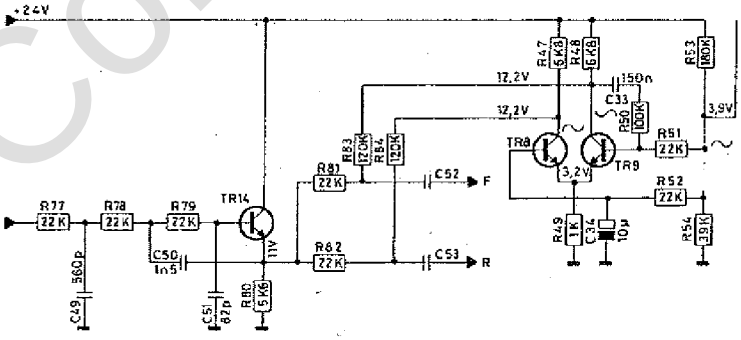


The difference signal is fed from the output of the ANRS circuit to the base of TR9. TR8 and TR9 operate as a differential amplifier. The two transistors have a common emitter resistor so that, if the current in TR9 increases, the current in TR8 will decrease commensurately and vice versa. Since the base of TR8 is shorted to chassis potential, signal-wise, we consequently obtain at the collector of TR9 a signal that is in phase opposition to the signal at the base of TR9 and, at the collector of TR8, a signal that is in phase with the signal at the base of TR9. The signals are mixed across resistors R81, R83, R82 and R84, resulting in the appearance of the F and R signals at C52 and C53, respectively.

BeoCollectors.com

**Silent**

The silent circuit is to ensure that the outputs of the Beogram 6000 are silent when the pickup arm is not lowered.

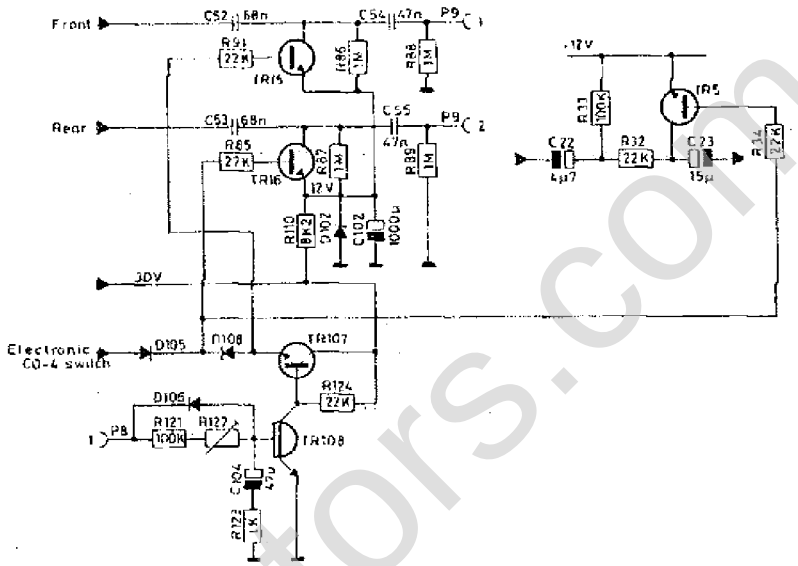


When the pickup arm is lowered, approx. 17 V will be present at pin 1 of P8. The charge picked up by C104 ensures that the channels are silent while the pickup arm is being lowered. When the bias at the base of TR108 reaches approx. +1.2 V, TR108 is forward biased. The collector of TR108 goes low, TR107 is reverse biased, the emitter of TR107 goes low, and if a CD-4 record is being played, the low level at the emitter of TR107 will be transmitted to the bases of TR5, TR15 and TR16, respectively; both the front and rear channels will then be open.
If the pickup arm is raised, the voltage at pin 1 of P8 drops to 0 V. TR108 is reverse biased, the collector goes high and TR107 is forward biased. The emitter of TR107 goes high; this high level is transmitted to the base of TR15 and, via D108, to the bases of TR16 and TR5, TR15, TR16 and TR5 are forward biased so that the signal path in both front and rear channels as well as the difference signal in the ANRS circuit are shorted to chassis potential.
D106 and R123 ensure rapid discharge of C104 when the pickup arm begins to rise.

BeoCollectors.com

**Electronic CD-4 switch**

TR104 and TR105 are an electronic switch (Schmitt trigger) which is tripped by means of the 30 kHz carrier level.
The switch turns on the CD-4 indicator and opens up the rear channel when CD-4 records are played.

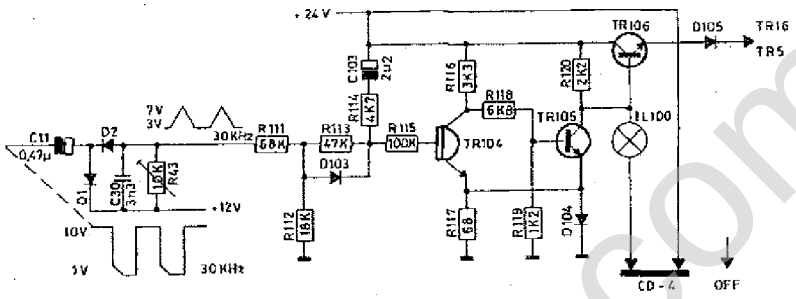


When a stereo record is played, 12V is present at the anode of D2. TR104 is forward biased, the collector goes low, and TR105 is reverse biased. The collector of TR105 goes high, and the CD-4 indicator IL100 is off. The high level at the collector of TR105 provides forward bias for TR106.
The emitter of TR106 goes high, which level is transmitted via D105 to the bases of TR16 and TR5 as forward bias, thereby causing the signal path in the rear channels and the difference signal in the ANRS system to be shorted to chassis potential.
When a CD-4 record is played, the carrier detector receives a 30 kHz signal; this is clamped to +12V through D1 and rectified through D2, resulting in the appearance at the anode of D2 of a DC voltage whose value will be: High 30 kHz level, low DC level, and vice versa. This DC level is applied to the base of TR104 as reverse bias, the collector goes high, and TR105 is forward biased, the collector of TR105 goes low and IL100 turns on.
Simultaneously therewith, TR106 is reverse biased, the emitter of TR106 goes low, TR16 and TR5 are reverse biased, thereby opening up the signal path in the rear channels.
D104 keeps the emitter levels of TR104 and TR105 stable, enabling the switch to trip even if the filament of IL100 is open.
C103 ensures that TR104 will not be switched by noise pulses etc. If a noise pulse causes a brief drop in the voltage at the anode of D2, the voltage across C103 will increase with the result that C103 draws brief charging current through the base/emitter junction of TR104. This causes TR104 to be forward biased briefly until the voltage at the anode of D2 possibly increases again.
D103 ensures rapid discharge of C103 when the voltage at the anode of D2 increases to 12V.

BeoCentre.com

## MECHANICAL ADJUSTMENT

### Height adjustment of turntable

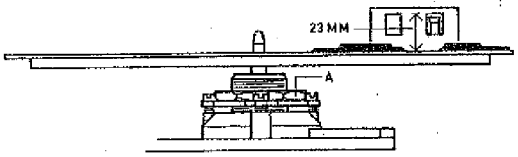


Loosen nut A at turntable bearing and adjust the height of the bearing so that the separation between turntable and detector arm is 23 mm.

Tighten nut A

### Vertical adjustment of turntable bearing

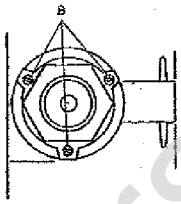


Turn the transit screws to lock the floating chassis.
With screws B adjust the turntable bearing to be perpendicular to the chassis, i.e. the surface of the turntable must be parallel with the cover plate.
Check height adjustment (23mm), both at the rim of the turntable and nearest the centre.

### Height and side adjustment of chassis

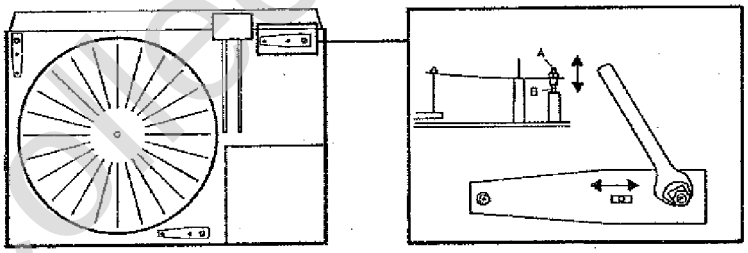


Loosen the transit screws so that the chassis floats.

By means of the spring mountings adjust the chassis so that the turntable is flush with the cover plate, with the chassis centrally located between the transit screws.

Height adjustment is performed with nut A. Sideways adjustment is performed by carefully bending the threaded pin B.

BeoCollectors.com

**Adjustment of electronic position marker**

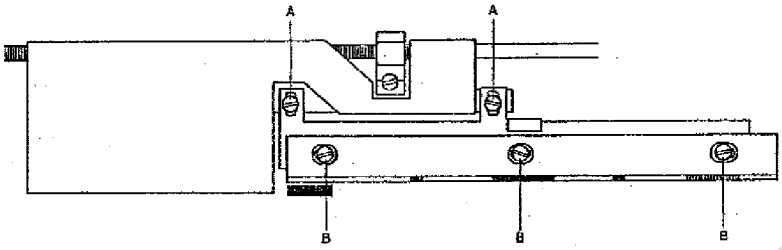


With screws A loosened, the position giver angle can be adjusted so that the position giver runs parallel with the photo resistor housing.
With screws B loosened, adjust the position marker backwards or forwards until the arm lowers on a 30 cm record between 146.5 mm and 148.25 mm from the centre of the record.

**Adjustment of magnet coil system**

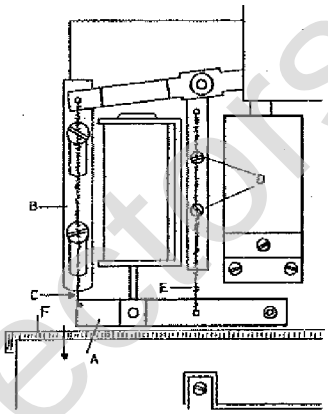


Loosen screws D. Pull arm A in the direction of the arrow until the separation between arm A and arm B at the point C is 1 mm. Move the magnet coil until the armature is the whole way down, and tighten screws D.

**Horizontal placement (fixing)**

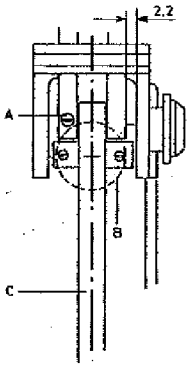


Place the pickup arm in the bearing bracket so that the middle line C of the pickup arm is located in the centre line of the shaft B with an accouracy of ± 0.2 mm. Adjustment is performed by loosening screw A and sliding the pickup arm to one side or the other and thereafter retightening the screws A. Use a gauge (e.g. a 2.2 mm drill) placed as shown in the sketch.

BeoCollectors.com

**Static balance**

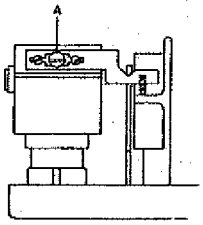


Set stylus force adjustment at "0".

Release the pickup arm from the lifting arm.

Adjust screw A for balance in the system.

**Adjustment of pickup arm length and parallelism**

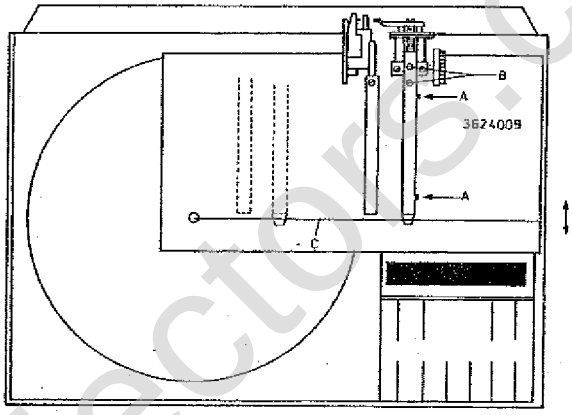


Adjust stylus force to 1 gr.
Take off driving belt for turntable.
Run pickup arm towards the centre.
Place tool 3624009 on Beogram 4002-6000 as shown in the sketch. Run the pickup arm close in towards pins A.
Lower pickup on to tool.
Slide tool back and forth so that the stylus falls into the groove C. Retain the tool in this position.
Raise the pickup and run it in towards the centre.
Lower the pickup in the position shown in the sketch.
If the stylus falls otside the groove C, adjust this deviation to one-half, using screws B.
Run the pickup arm all the way out to the pins A, where the pickup is lowered, and move tool 3624009 so that the stylus is accurately positioned in the groove C.
Raise the pickup arm.

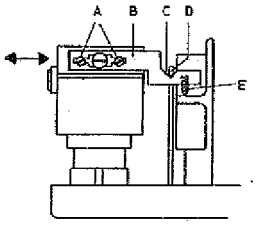


The pickup arm should be adjusted to be parallel with pins A in tool 3624009.
Adjustment is performed by loosening screws A and then sliding the arm B in the direction of the arrow.

BeoCollectors.com

When checking for parallelism, the arm D must be the whole way down in the notch C.
By means of the screw E adjust the pickup arm to be horizontal. Reference: detector arm.
Check pickup arm length if necessary.

Adjustment of detector arm

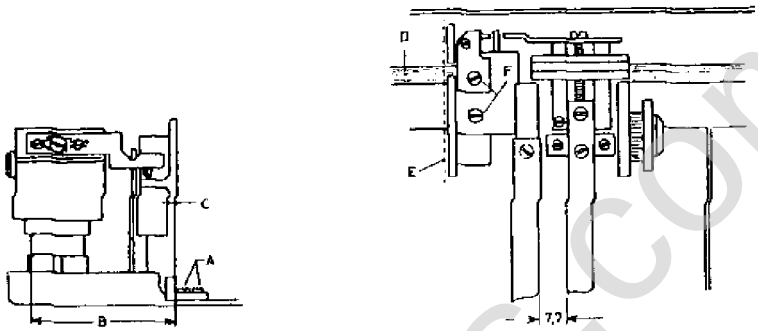


Loosen screws A.
Adjust detector arm holder C so that distance B is 49.4 mm. Make sure that the surface E is perpendicular to the rod D.
Tighten screws A.
With the screws F loosened, adjust the detector arm to be parallel with the pickup arm at a distance of 7.7 mm (the pickup arm must be adjusted for horizontal placement and parallelism).

*Turning*

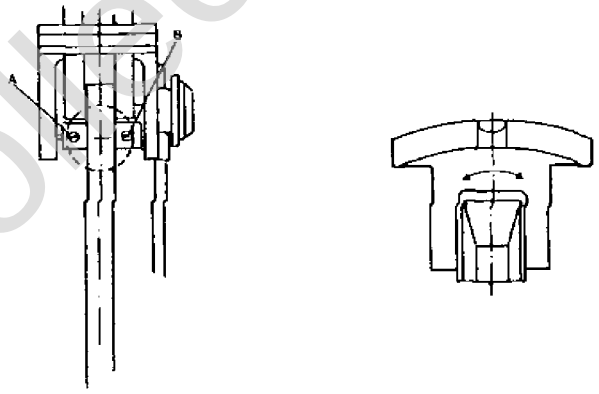


By loosening the screw A and tightening the screw B, or vice versa, adjust the turning of the pickup arm so that its top side is parallel with the rods.
A check can be made by means of a sprit level with the Beogram placed on a horizontal support.

BeoCollectors.com

**Lower adjustment**

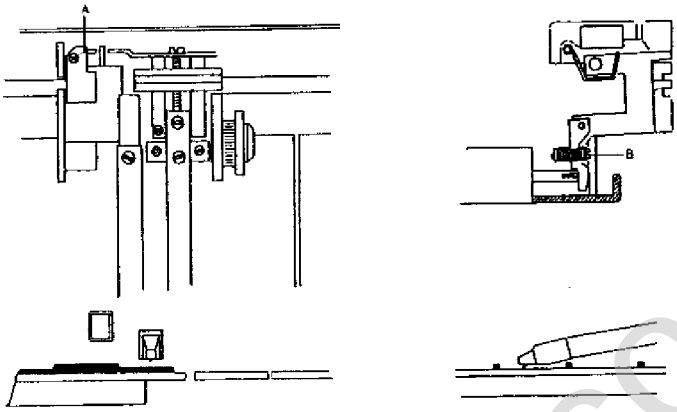


Loosen the screw A.
Adjust the screw B so that the stylus, with the pickup arm in its lowered position, only just touches the turntable between the ribs.
Thereafter, also with the pickup arm in its lowered position, adjust the screw A so that the stylus positively clears the low portion of the turntable ribs (approx. 0.5 mm).

**Adjustment of damper cylinder**

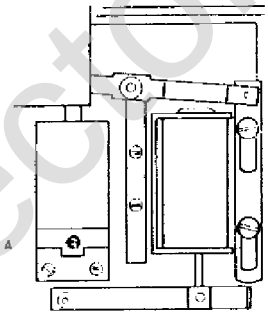


Adjust the valve A so that the pickup lowers at a uniform rate of speed.
Lower time approx. 1 sec.

**Adjustment of diaphragm**

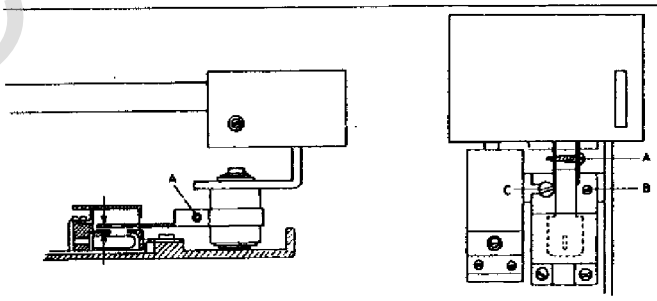


The diaphragm is adjusted by loosening the screw A and turning it on the pivot.
Adjust the diaphragm to be as close to the housing as possible but without actually touching it.
Also adjust the diaphragm so that the diaphragm arm becomes parallel with the pickup arm.
Fine adjustment of the diaphragm is performed with test record 3621001 in cut 5, with the turntable belt taken off.

1 Run arm in above record.
2 Lower pickup.

BeoCollectors.com

3 Rotate the turntable manually, checking that the servo regulates the first time after 2 ± 1 revolution and thereafter at each revolution.
4 If the servo does not regulate within 1-3 revolutions, loosen the screw C and adjust eccentric B; thereafter raise the arm and repeat items 2-4.
5 With the adjustment of eccentric B completed, tighten the screw C.

Make sure that the arm has made an inward movement before the pickup lowers.

**Adjustment of spindle**

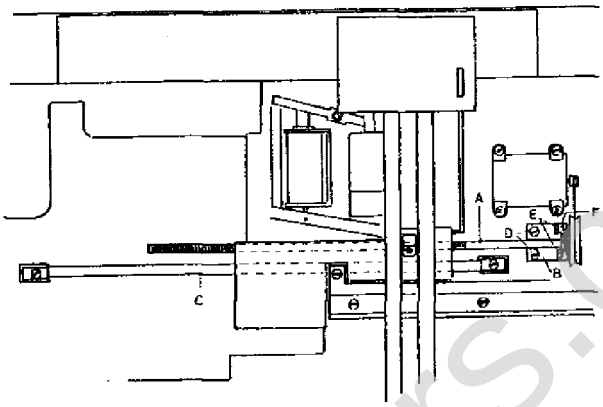


Adjust the spindle A so that it is parallel with the rod C both in the vertical and horizontal planes.
The horizontal plane is adjusted by loosening the screws D and turning the bearing holder B.
The vertical plane is adjusted by loosening screws E and turning the bearing F.

**Lubrication chart**

The need for relubrication is negligible.
In the case of overhauls and when replacing mechanical parts the directions below should be followed.

| Point of lubrication | Lubricant | Remarks |
|---|---|---|
| Turntable bearing | 3984008, M4 oil | Apply to shaft point + streak throughout length of shaft |
| Spindle pos. No. 213 | 3984216, Rocol MTS 1000. Dilute to oily consistency with 3984221, ESSO NUTO H44/HP32 | |
| Shaft tie-bar No. 137 | 3984218, Molykote DX paste (white) | Apply to entire surface in thin film |
| Spindle bearing pos. No. 122 | 3984218, Molykote DX paste (white) | |
| Shifter arm pos. No. 198 | 3984211, Castrol Everyman Oil | Apply to sliding surfaces |
| Arm pos. No. 190 | 3984211, Castrol Everyman Oil | Apply at point of rotation |
| Arm pos. No. 193 | 3984211, Castrol Everyman Oil | Apply at point of rotation |

BeoCollectors.com

## ELECTRICAL ADJUSTMENTS

To get at the trimmer potentiometers, take off top portion of turntable.

**Speed**

Set 33 and 45 rpm scales to 0.

Adjust 33 rpm with potentiometer 1R15
Adjust 45 rpm with potentiometer 1R14

Speed can be checked in more than one way:

1: Stroboscobe disc and lamp connected to the mains.
This check has an inherent uncertainty of approx.
2% since the mains frequency deviates by approx.
±1 Hz at 50 Hz.

2: Stroboscope disc and stroboscope lamp. This check gives an accuracy corresponding to the tolerance of the stroboscope lamp, usually much better than that of the mains frequency.

Production adjustment is based on division to 50 Hz from a crystal at 1MHz ±1 Hz, which gives an accuracy of approx. 0.005%.

***Slow slide transport***

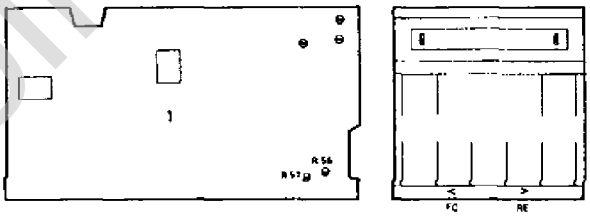


Connect VTVM to servo motor terminals. Depress " " button and adjust, with R156, voltage across motor to 3 V.
Reverse measuring leads to VTVM (across servo motor) and depress ">".
Adjust voltage across motor with 1R57 to 3 V.

BeoCollectors.com

**Photo darlington**

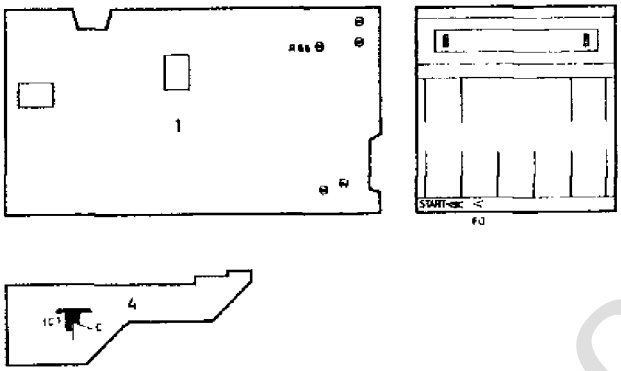


"START<<" Activate.

Move slide towards center of the turntable. When the slide is facing a transparent field on the position marker, stop it by depressing "<".
Connect vacuum-tube voltmeter to collector on 4IC1.
Adjust 1R88 tilvoltage on the collector 4IC1 is 5V.

BeoCollectors.com

## ADJUSTMENT OF CD-4 DEMODULATOR

**Instruments**

CD-4 generator MSG 213, Meguro
AF VTVM RV 9, B&O
Oscilloscope OS 1000, Advance
D 65, Telequipment

Tone generator TG 7, B&O
Test record: 4DE-205, JVC

**CD-4 generator calibration**

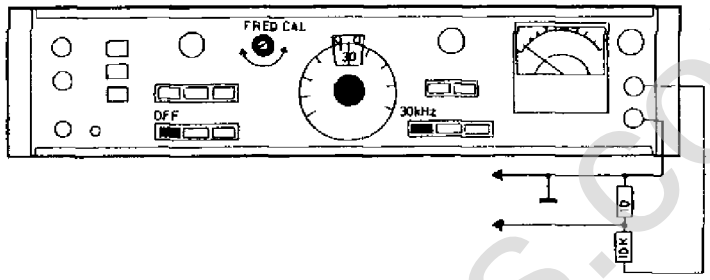


Depress MOD. SELECTOR "OFF".
Depress FREQ. CAL. 30 kHz.
Set FREQUENCY dial to 30 kHz.
Adjust FREQ. CAL. for minimum meter reading. While adjusting, the meter needle will make three dips.
Select the one giving the lowest meter reading.
In order to get a more accurate range of variation the generator output should be loaded as shown in the sketch.
References are for left channel and bracketed references are for right channel.
NOTE: Measuring instruments, generator and demodulator should have power applied to them for not less 15 minutes before attempting adjustment.

**VCO**

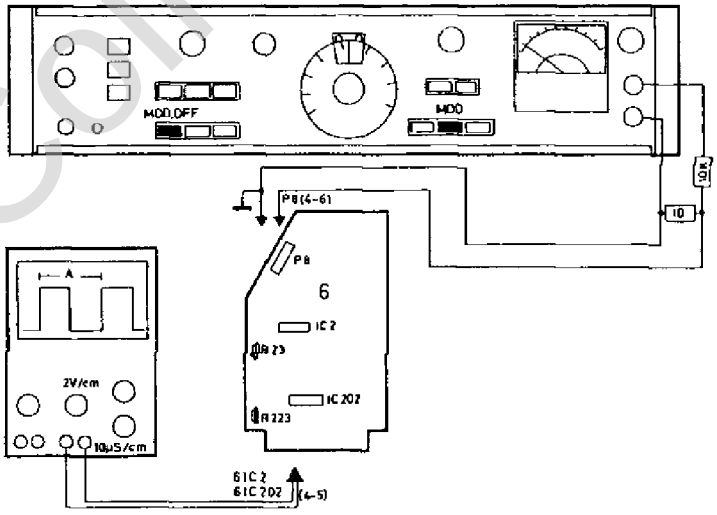


1. Depress MOD. SELECTOR "OFF".
2. Depress "MOD".
3. Connect CD-4 generator to pin 4 of/P8 (Pin 6 of P8).
4. Connect oscilloscope to pins 4-5 of 6IC2 (6IC202).
5. Start Beogram (press "START" and thereafter "<").
6. Read distance A on oscilloscope (one cycle).
7. Open connection between CD-4 generator and P8, and adjust 6R23 (6R223) so that distance A (the frequency) is the same as at point 6.

BeoCollectors.com

ANRS

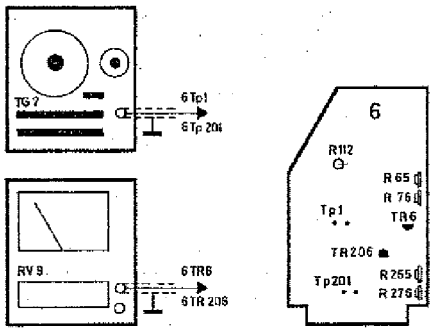


1. Short 6R112.
2. Unsolder shorting strap at 6Tp1 (6Tp201)
3. Connect tone generator to 6Tp1 (6TP201) at 6C22 (6C222).
4. Set tone generator to deliver 10 kHz 4.10 mV.
5. Connect VTVM to collector of 6TR6 (6TR206).
6. Lower pickup arm (press "START", thereafter " ").
7. Adjust 6R76 (6R276) for 1.58 mV at collector of 6TR6 (6TR206).
8. Set tone generator to deliver 400 Hz 23.1 mV.
9. Adjust 6R65 (6R265) for 18.2 mV at collector of 6TR6 (6TR206).
   ANRS Check
   As input and output points again use 6Tp1 (6Tp201) and collector of 6TR6 (6TR206).
10. Set tone generator to deliver 400 Hz 73.2 mV; output should then be 93 mV ± 2.5 dB.
11. Set tone generator to deliver 10 kHz 23.1 mV; output should then be 16 mV ± 2.5 dB.

Remove short from across 6R112.
Solder shorting strap at 6Tp1 (6Tp201).

It is important that the above sequence be observed.

BeoCollectors.com

Carrier detector

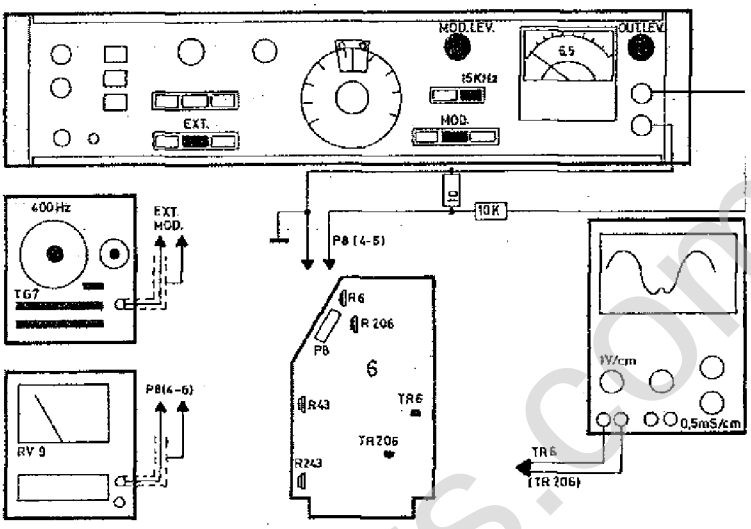


1. Turn 6R11 (6R211) to max. gain (centre pin towards C 6TR1 (6TR201)).
2. Turn 6R6 (6R206) to max. gain (min. resistance).
3. Depress MOD. SELECTOR "EXT".
4. Depress METER RANGE "15 kHz".
5. Depress "MOD."
6. Set tone generator to deliver 400 Hz. Connect tone generator to EXT. MOD. on back of CD-4 generator.
7. Set tone generator output and "MOD. LEVEL" for 6.5 kHz max. frequency swing on meter (0-15 kHz scale).
8. Short pins 4-6 of P8 together and connect CD-4 generator.
9. Set "OUT. LEVEL" to 0.58 mV as measured with AF VTVM at pins 4-5 of P8.
10. Connect oscilloscope to collector of 6TR6 (6TR206).
11. Lower pickup arm (press "START", thereafter "∧∨").
12. Adjust 6R43 (6R243) so that sine-wave curve is only just undistorted.
13. Remove connections from CD-4 generator, and remove shorting strap from between pins 4-6 of P8.

BeoCollectors.com

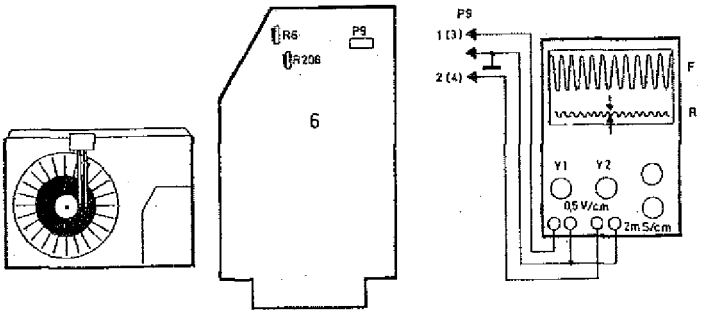


Separation can be measured in more than one way.

1: Using an oscilloscope.
Connect Y1 input from oscilloscope to demodulator output, pin 1 (3) of P9.
Connect Y2 input from oscilloscope to demodulator output, pin 2 (4) of P9.
Play test record, e.g. JVC 4DE-205, section 3, with the MMC 6000 to be employed with the demodulator. Adjust 6R6 (6R206) for min. at Y2 input corresponding to min. in rear channels.

2: Using a 4-channel amplifier.
Switch off front channels.
Play test record JVC 4DE-205 with the MMC 6000 to be employed with the demodulator.
Adjust 6R6 (6R206) for min. sound in rear channels.

**Fine Adjustment Carrier Wave Detector**

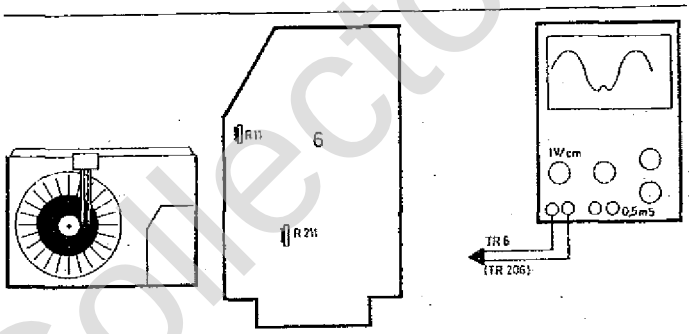


**Silent Circuit**

Connect oscilloscope to collector 6TR6 (6TR206).
Play test disc JVC 4DE - 205 section 2.
Adjust 6R11 (6R211) till sine wave is just undistorted.
Note: In case of replacement of pickup, channel separation and carrier wave detector must be adjusted.

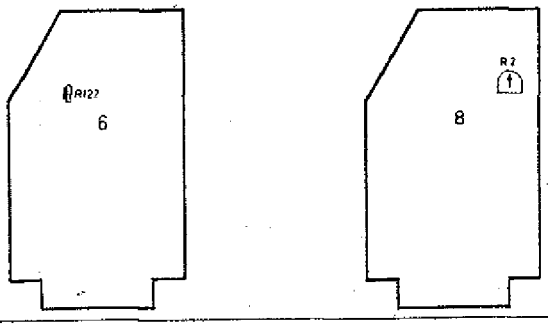


**Beogram 6000**

Adjust 6R122 so that pickup signal is allowed to pass from the pickup cartridge between 1/2 and 1 revolution of the record after the pickup has been lowered (33 rpm).

**Beogram 4002**

Adjust 8R2 as described for 6R122 above.

BeoCollectors.com

## FAULT-FINDING

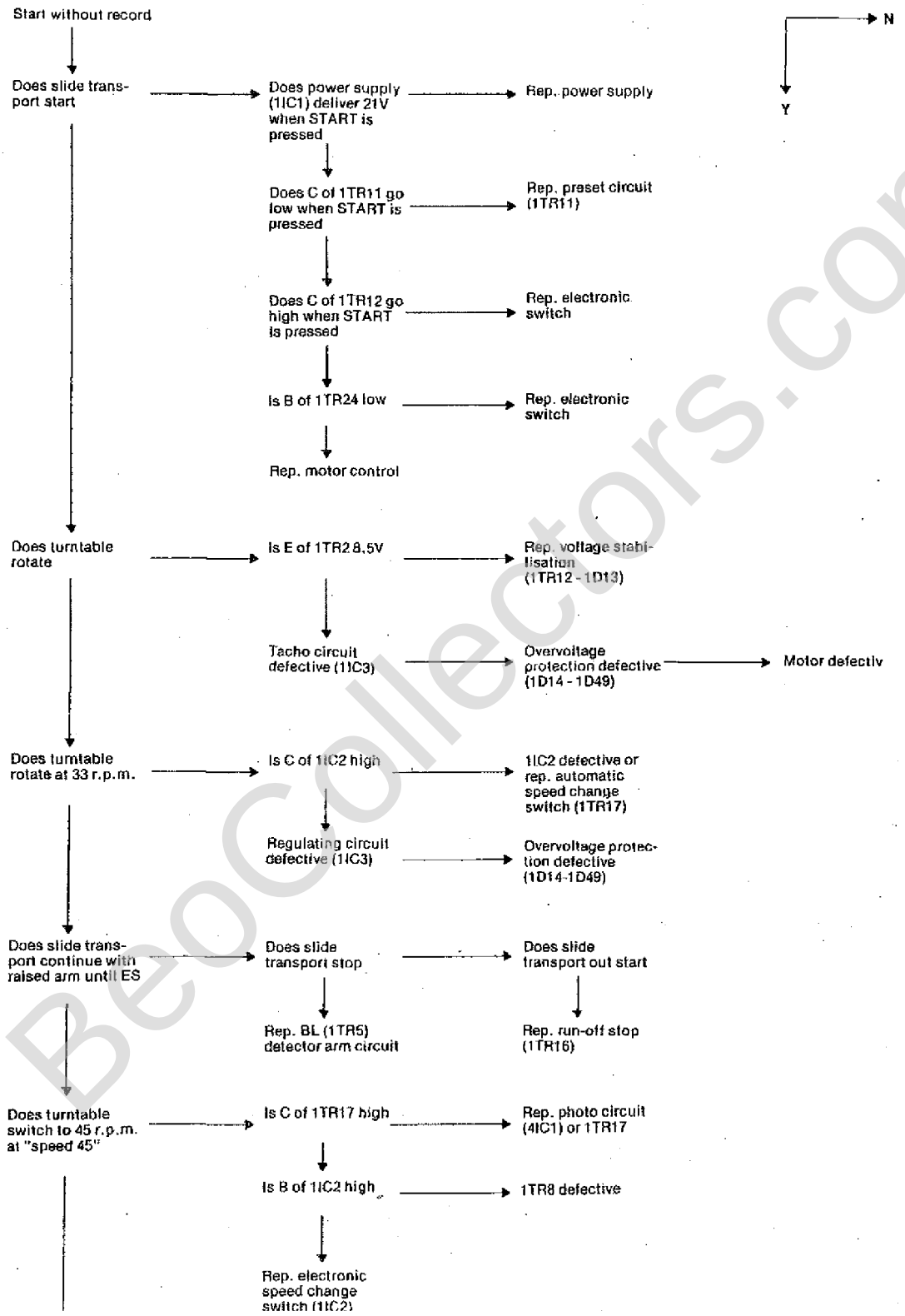


BeoCollectors.com

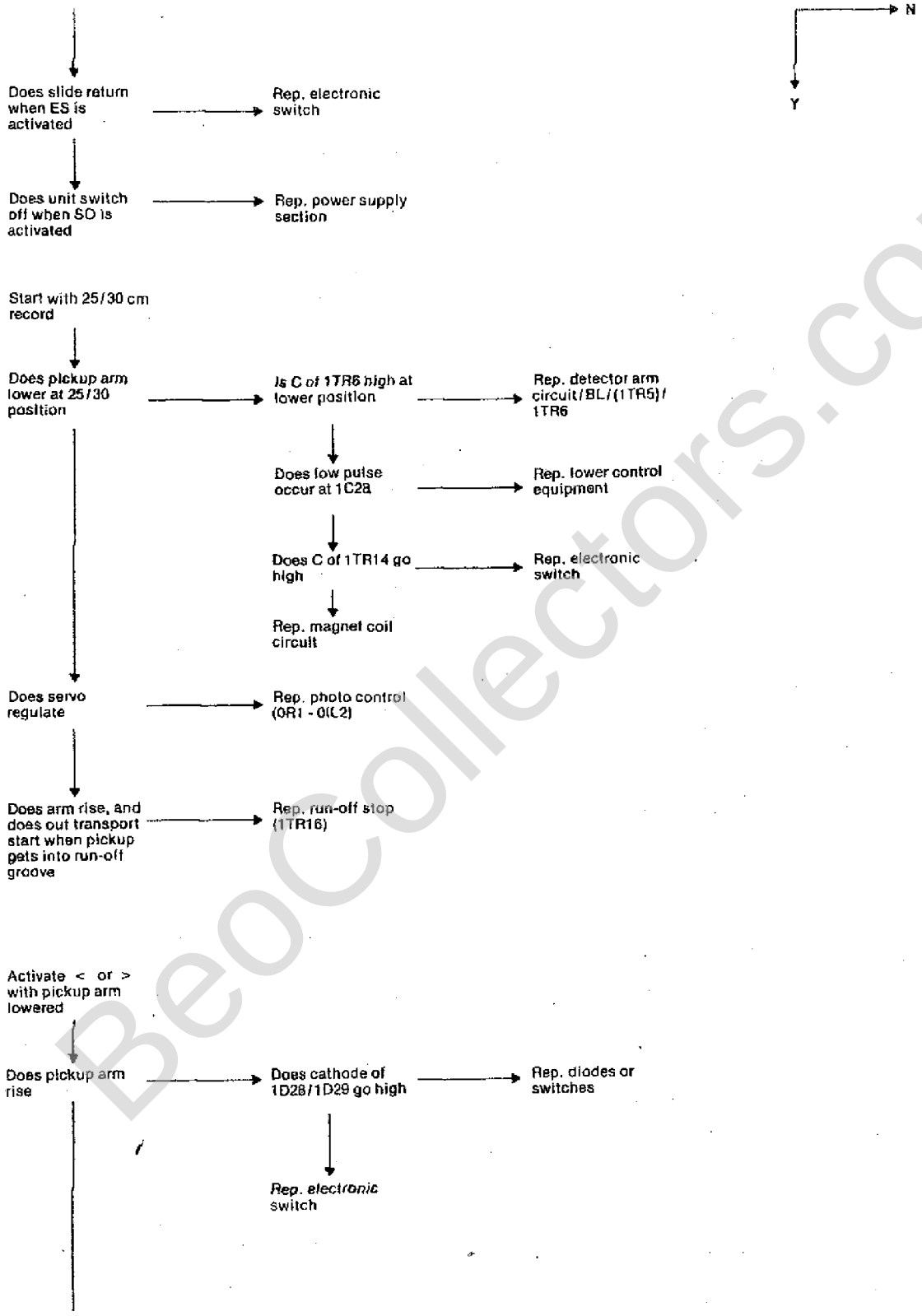


BeoCollectors.com

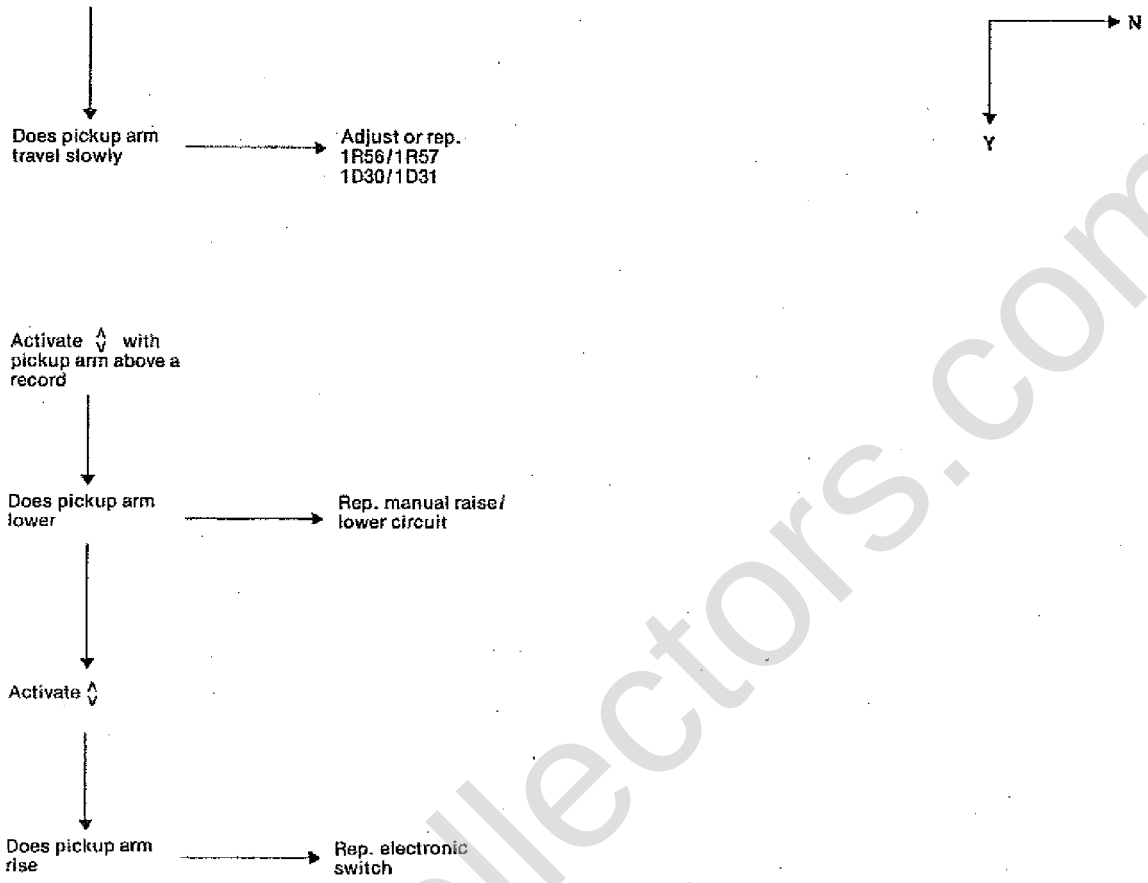


BeoCollectors.com

MECHANICAL PARTS LIST

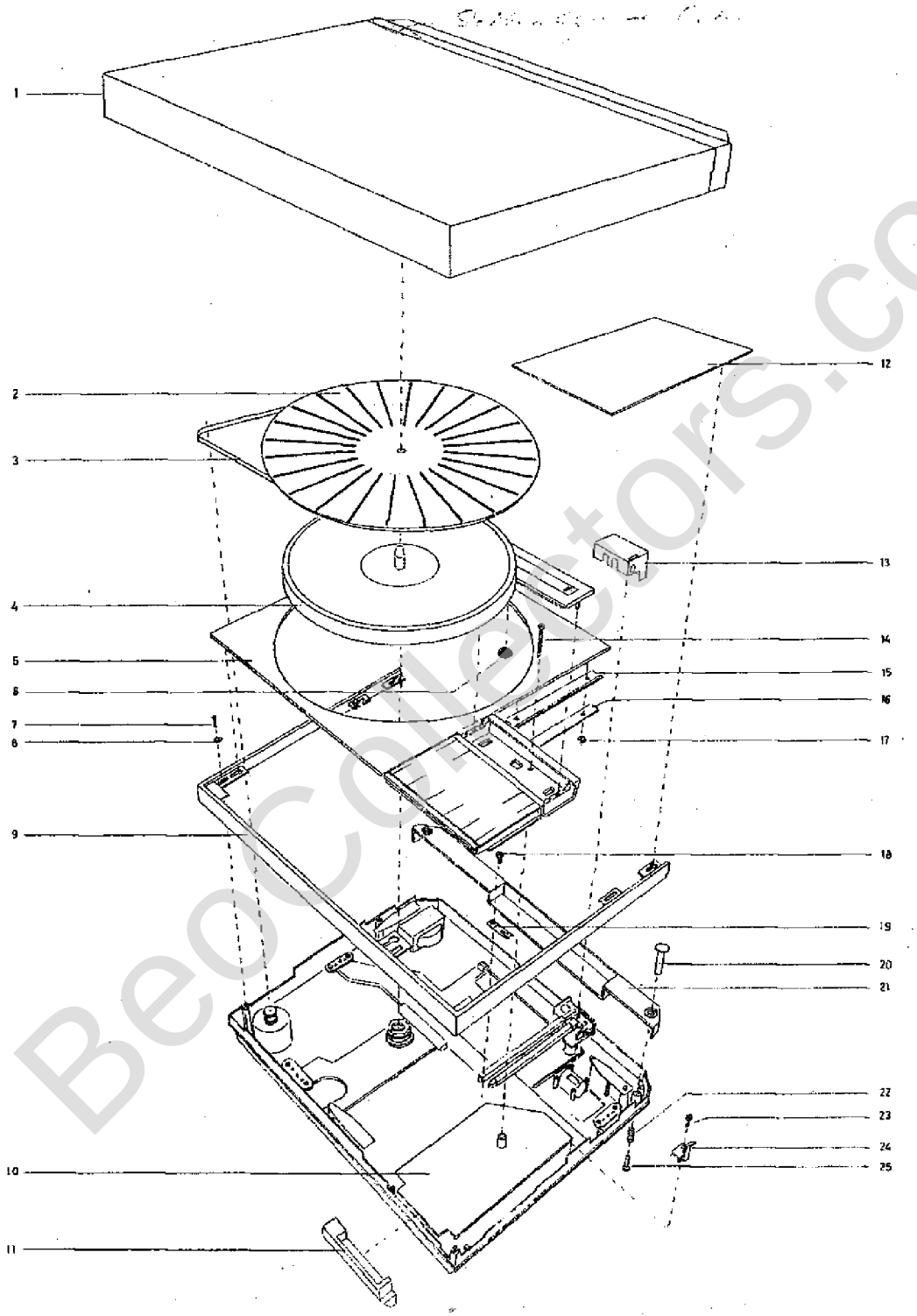


BeoCollectors.com

| | | | | | | | | |
|---|---|---|---|---|---|---|---|---|
| DD 1 | 3164184 | Dust cover Beogram 4002 | | 3412054 | Cabinet, oak | 18 | 2042205 | Screw AM 4 x 6 DIN 84 |
| | 3164183 | Dust cover Beogram 6000 | | 3412055 | Cabinet, white | 19 | 2816083 | Spring |
| 2 | 2726084 | Turntable | DS | 8005014 | PC-board, for 4002 | 20 | 2994012 | Bushing |
| 3 | 2732018 | Driving-belt | MS | 8005015 | PC-board, for 6000 | 21 | 3452242 | Back piece 4002, 5511 |
| 4 | 2726089 | Turntable | 11 | 3152159 | Holder | | 3452243 | Back piece 4002, 5512 |
| 5 | 3458154 | Top plate | 12 | 3458114 | Top plate | | 3452244 | Back piece 4002, 5513 |
| 6 | 3912037 | Felt washer | 13 | 3164142 | Cover | | 3452245 | Back piece 4002, 5514 |
| 7 | 2013002 | Screw 2.9 c 6.5 DIN 7982 | 14 | 2038237 | Screw AM 3 x 30 DIN 84 | | 3452246 | Back piece 6000, 5515 |
| 8 | 2803004 | Guide washer | 15 | 2816085 | Spring | | 3452268 | Back piece 4002-6000 without print |
| 9 | 3412051 | Cabinet, teak | 16 | 3014023 | Guide plate | 22 | 2810066 | Spring |
| | 3412053 | Cabinet, rosewood | 17 | 2380093 | Nut, nylon | 23 | 2013066 | Screw 2.84 x 12.7 |

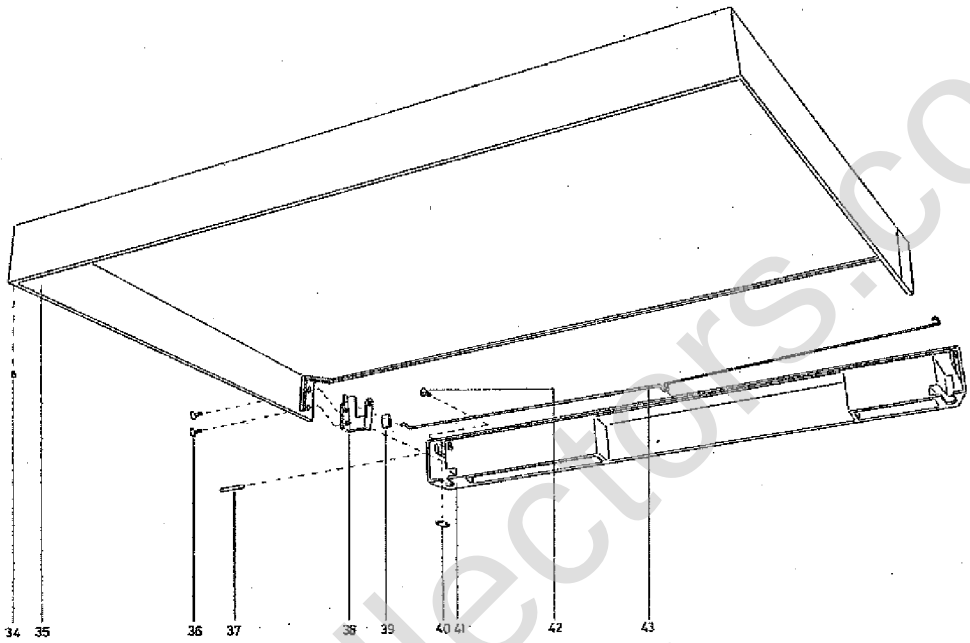


| | | | | | | | | |
|---|---|---|---|---|---|---|---|---|
| 24 | 3152135 | Lead holder | | 2560040 | Decorative list Beogram 6000 | 39 | 3015030 | Guide piece |
| 25 | 2042216 | Screw AM 4 x 16 DIN 84 | 36 | 2038055 | Screw AM 3 x 6 DIN 963 black | 40 | 3010011 | Stop for lid |
| 34 | 3010007 | Stop | 37 | 2830014 | Bearing needle | 41 | 3452145 | Back piece |
| 35 | 3164190 | Lid | 38 | 3030023 | Hinge, left | 42 | 2038050 | Screw AM 3 x 4 DIN 63 |
| | 2560039 | Decorative list Beogram 4002 | | 3030022 | Hinge, right | 43 | 2819062 | Spring |

BeoCollectors.com

| | | | | | | | | |
|---|---|---|---|---|---|---|---|---|
| DD 1 | 3164184 | Dust cover Beogram 4002 | | 3412054 | Cabinet, oak | 18 | 2042205 | Screw AM 4 x 6 DIN 84 |
| | 3164183 | Dust cover Beogram 6000 | | 3412055 | Cabinet, white | 19 | 2816083 | Spring |
| 2 | 2726084 | Turntable | DS | 8005014 | PC-board, for 4002 | 20 | 2994012 | Bushing |
| 3 | 2732018 | Driving-belt | MS | 8005015 | PC-board, for 6000 | 21 | 3452242 | Back piece 4002, 5511 |
| 4 | 2726089 | Turntable | 11 | 3152159 | Holder | | 3452243 | Back piece 4002, 5512 |
| 5 | 3458154 | Top plate | 12 | 3458114 | Top plate | | 3452244 | Back piece 4002, 5513 |
| 6 | 3912037 | Felt washer | 13 | 3164142 | Cover | | 3452245 | Back piece 4002, 5514 |
| 7 | 2013002 | Screw 2.9 c 6.5 DIN 7982 | 14 | 2038237 | Screw AM 3 x 30 DIN 84 | | 3452246 | Back piece 6000, 5515 |
| 8 | 2803004 | Guide washer | 15 | 2816085 | Spring | | 3452268 | Back piece 4002-6000 without print |
| 9 | 3412051 | Cabinet, teak | 16 | 3014023 | Guide plate | 22 | 2810066 | Spring |
| | 3412053 | Cabinet, rosewood | 17 | 2380093 | Nut, nylon | 23 | 2013066 | Screw 2.84 x 12.7 |

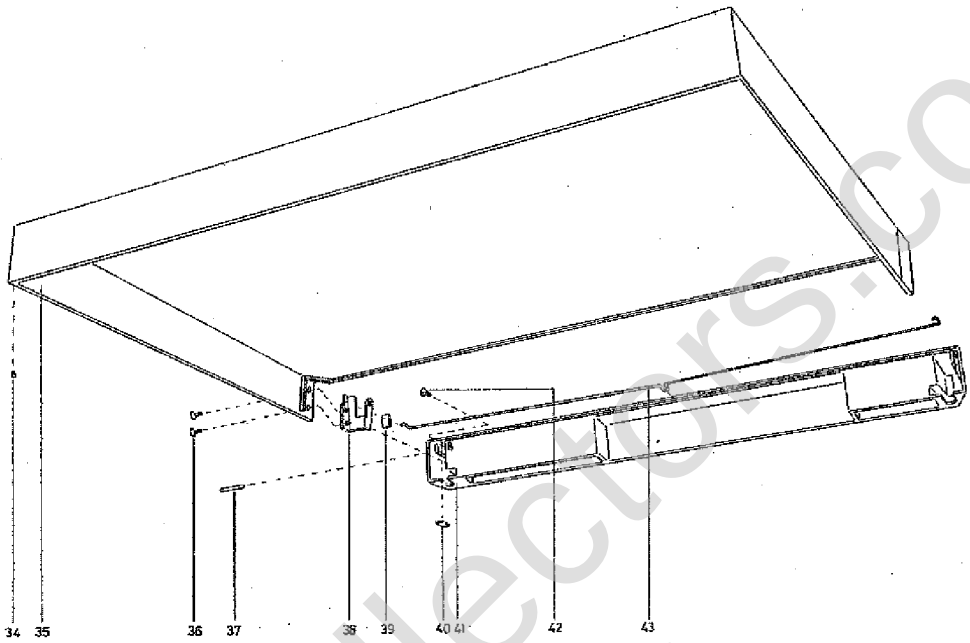


| | | | | | | | | |
|---|---|---|---|---|---|---|---|---|
| 24 | 3152135 | Lead holder | | 2560040 | Decorative list Beogram 6000 | 39 | 3015030 | Guide piece |
| 25 | 2042216 | Screw AM 4 x 16 DIN 84 | 36 | 2038055 | Screw AM 3 x 6 DIN 963 black | 40 | 3010011 | Stop for lid |
| 34 | 3010007 | Stop | 37 | 2830014 | Bearing needle | 41 | 3452145 | Back piece |
| 35 | 3164190 | Lid | 38 | 3030023 | Hinge, left | 42 | 2038050 | Screw AM 3 x 4 DIN 63 |
| | 2560039 | Decorative list Beogram 4002 | | 3030022 | Hinge, right | 43 | 2819062 | Spring |

BeoCollectors.com

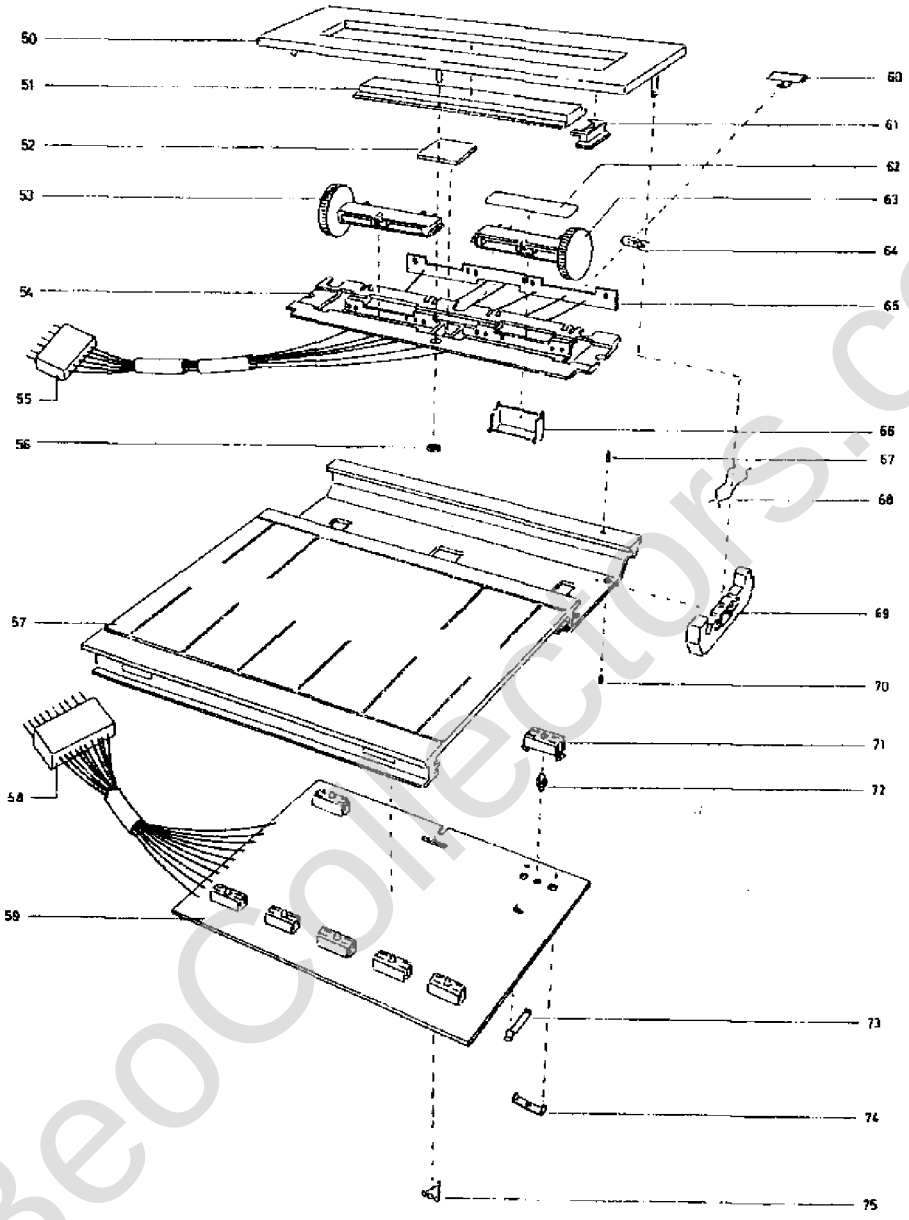


| | | | | | | | | |
|---|---|---|---|---|---|---|---|---|
| 50 | 3458121 | Top plate | 58 | 7220052 | Housing without pin 10 pol. | 67 | 2361018 | Locking pin |
| 51 | 3199046 | Dial | | 7500076 | Contact pin | 68 | 2819096 | Spring |
| 52 | 3164179 | Cover | 59 | 8005018 | PC-board | 69 | 3152129 | Holder |
| 53 | 5300090 | Potentiometer, left | 60 | 3358116 | Heat sink | 70 | 2072701 | Threaded pin M3 x 4 DIN 438 |
| 54 | 3131085 | Housing for potentiometer | 61 | 3199047 | End piece | 71 | 3152068 | Holder |
| 55 | 7220057 | Housing without pins 6 pol. | 62 | 3180621 | Sticker | 72 | 2992059 | Contact pin |
| | 7500076 | Contact pin | | 5300091 | Potentiometer | 73 | 7500075 | Contact spring |
| 56 | 2395034 | Spire | | 8230052 | Lamp 24 V 40 mA | 74 | 7500050 | Contact bridge |
| 57 | 8055016 | Chassis, complete 4002 | 65 | 6140376 | PC-board | 75 | 2816111 | Locking spring |
| | 8055017 | Chassis, complete 6000 | 66 | 3300044 | Screen | | | |

BeoCollectors.com

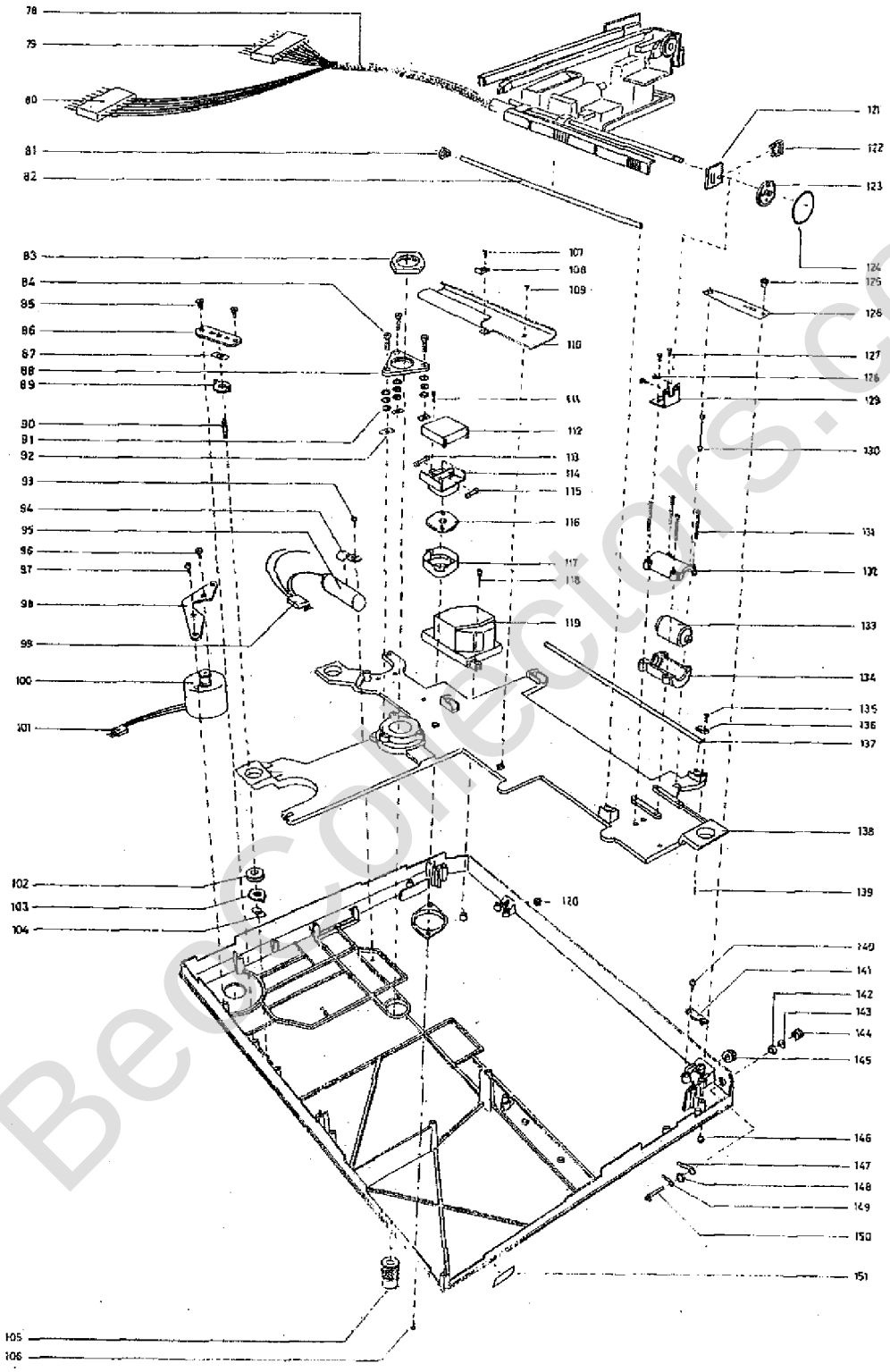


BeoCollectors.com

# 6-5

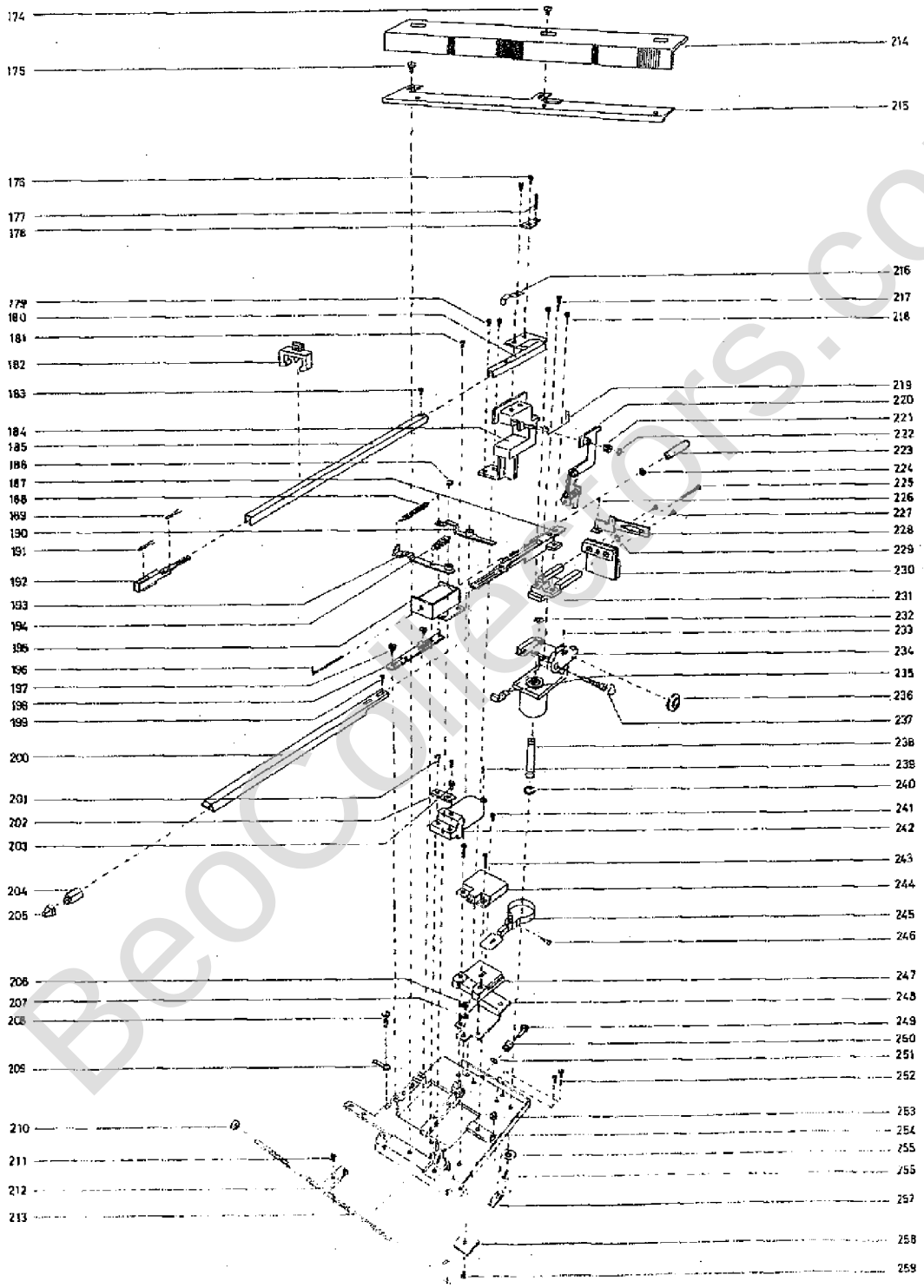


BeoCollectors.com

| | | |
|---|---|---|
| 174 | 2038952 | Screw 3 x 4 DIN 963 |
| 175 | 2038206 | Screw 3 x 4 DIN 84 |
| 176 | 2038247 | Screw AM 3 x 6 mm DIN 84 |
| 177 | 2072918 | Threaded pin M3 x 15 mm |
| 178 | 3151086 | Holder |
| 179 | 2038247 | Screw AM 3 x 6 mm DIN 84 |
| | 2625002 | Tooth-lock washer |
| | 7530008 | Solder tag |
| 180 | 3152076 | Holder |
| 181 | 2032208 | Screw AM 3 x 5 mm DIN 84 |
| 182 | 3391407 | Transit protection |
| 183 | 2034236 | Screw AM 2 x 3 mm DIN 84 |
| 184 | 3152145 | Holder for cover |
| | 3947421 | Tape |
| | 2645025 | Plate |
| 185 | 3937808 | Slave arm |
| 186 | 2390004 | Circlip UG 3 x 0.6 |
| 187 | 3152179 | Holder for pickup arm complete |
| 188 | 2810083 | Spring |
| 189 | 8760002 | Foto cell |
| 190 | 2853025 | Arm |
| 191 | 8230047 | Lamp 6V |
| 192 | 3375026 | Optics |
| 193 | 2853045 | Arm |
| 194 | 2810087 | Spring |
| 195 | 6810006 | Magnet coil |
| 196 | 2850047 | Press bar |
| 197 | 2038948 | Screw |
| 198 | 2852035 | Change lever |
| 199 | 2034236 | Screw AM 2 x 3 mm DIN 84 |
| 200 | 2850077 | Pickup arm |
| 201 | 2038216 | Screw AM 3 x 10 mm DIN 84 |
| 202 | 2641075 | Clamp |
| 203 | 2072911 | Adjustment screw |
| 204 | 8954410 | Pickup MMC 4000 |
| | 8954400 | Pickup MMC 6000 |
| | 3624008 | Service-kit for pickup |
| 205 | 3302230 | Cup for pickup |
| 206 | 2038948 | Screw |
| 207 | 2614021 | Washer |
| 208 | 2038208 | Screw AM 3 x 5 DIN 84 |
| 209 | 7530023 | Solder tag |
| 210 | 2389031 | Bearing nut |
| 211 | 2038208 | Screw AM 3 x 5 DIN 84 |
| 212 | 3152074 | Holder |
| 213 | 2993028 | Spindle |
| 214 | 3199049 | Dial |
| 215 | 3151139 | Holder for dial |
| 216 | 2816216 | Spring |
| 217 | 2034220 | Screw AM 2 x 12 DIN 84 |
| 218 | 2034211 | Screw AM 2 x 6 DIN 84 |
| 219 | 2819061 | Spring |
| 220 | 2851083 | Lifting arm complete |
| | 2812065 | Spring |
| | 2034219 | Screw AM 2 x 10 DIN 84 |
| 221 | 2812041 | Spring |
| 222 | 2390004 | Circlip |
| 223 | 2894029 | Armature |
| 224 | 2802023 | Washer |
| 225 | 2038233 | Screw AM 3 x 20 DIN 84 |
| 226 | 2072701 | Threaded pin M3 x 4 mm |
| 227 | 2034231 | Screw AM 2 x 4 DIN 84 |
| 228 | 2854023 | Arm |
| 229 | 2390001 | Circlip |
| 230 | 3342030 | Counterweight |
| 231 | 3152162 | Holder for counterweight |
| 232 | 2390046 | Circlip |
| 233 | 2070400 | Threaded pin M2 x 3 mm |
| 234 | 3150032 | Bearing holder |
| | 2900003 | Ball bearing |
| | 2622168 | Washer, brass |
| | 2812036 | Spring |
| | 2390047 | Circlip |
| 235 | 2548109 | Bracket |
| 236 | 2700008 | Adjustment bushing |
| 237 | 2834041 | Shaft collected |
| 238 | 2831025 | Shaft |
| 239 | 2365085 | Valve |
| 240 | 2390046 | Circlip |
| 241 | 2038206 | Screw AM 3 x 4 DIN 84 |
| 242 | 3131123 | Damper cylinder |
| 243 | 2038222 | Screw AM 3 x 14 DIN 84 |
| 244 | 3164196 | Housing with lamp |
| 245 | 2654059 | Diaghragmarm |
| 246 | 2013203 | Screw 2.84 x 12.7 ART 4261 |
| 247 | 3131052 | Housing for foto resistor |
| | 5210004 | Foto resistor |
| 248 | 3151085 | Holder |
| 249 | 2038946 | Screw |
| 250 | 2794029 | Roller |
| 251 | 2622041 | Washer |
| 252 | 2038208 | Screw AM 3 x 5 DIN 84 |
| 253 | 2798003 | Eccentrik |
| 254 | 3114068 | Chassis, slide |
| 255 | 2624028 | Thrust washer |
| 256 | 2390046 | Circlip |
| 257 | 2510086 | Bracket |
| 258 | 6140417 | PC-board |
| 259 | 2038206 | Screw AM 3 x 4 DIN 84 |

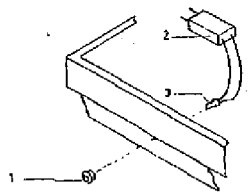


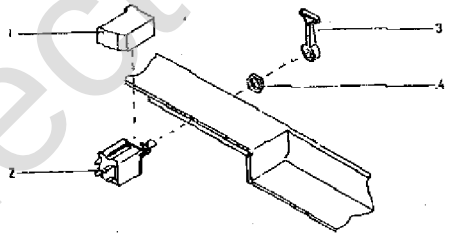


| | | |
|---|---|---|
| 1 | 3152182 | Bushing |
| 2 | 7220037 | Housing without pins 3 pol. |
| | 7500076 | Contact pin |
| 3 | 6100195 | Diode |

| | | |
|---|---|---|
| 1 | 3300053 | Screen |
| 2 | 7450018 | Mains switch |
| 3 | 2777033 | Arm for mains switch |
| 4 | 2380047 | Nut |

BeoCollector.com

## PARTS LIST FOR PC-BOARD 8005014 (MEC.)

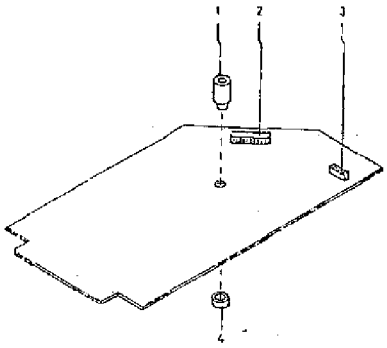


| | | |
|---|---|---|
| 1 | 2938093 | Bushing, support tube |
| 2 | 7210091 | Socket 9 pol. |
| 3 | 7210026 | Socket 6 pol. |
| 4 | 2938092 | Bushing for support tube |

## PARTS LIST FOR PC-BOARD 8005015 (MEC.)

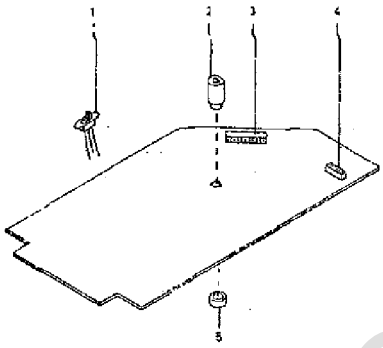


| | | |
|---|---|---|
| 1 | 7402042 | Switch |
| 2 | 2938093 | Bushing, support tube |
| 3 | 7210091 | Socket 9 pol. |
| 4 | 7210026 | Socket 6 pol. |
| 5 | 2938092 | Bushing for support tube |

## PARTS LIST FOR PC-BOARD 8005016 (MEC.)

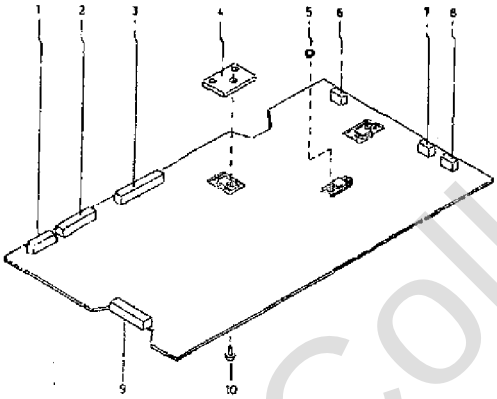


| | | |
|---|---|---|
| 1 | 7210105 | Socket 6 pol. |
| 2 | 7210065 | Socket 8 pol. |
| 3 | 7210106 | Socket 11 pol. |
| 4 | 3558109 | Heat sink for transistor |
| 5 | 2365105 | Valve for transistor |
| 6 | 7210104 | Socket 4 pol. |
| 7 | 7210103 | Socket 3 pol. |
| 8 | 7210103 | Socket 3 pol. |
| 9 | 7210097 | Socket 10 pol. |
| 10 | 2933202 | Screw for transistor |

## PARTS LIST FOR PC-BOARD 8005017 (MEC.)

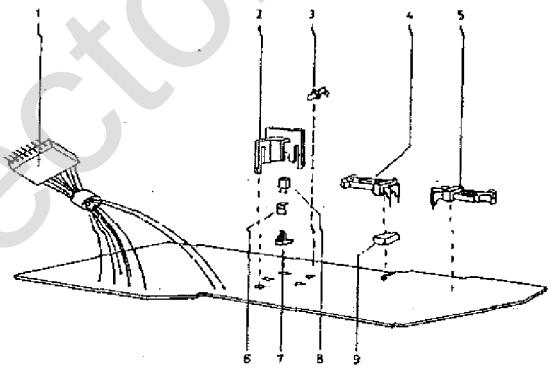


| | | |
|---|---|---|
| 1 | 7220051 | Housing 8 pol. |
| | 7500076 | Contact pin |
| 2 | 3131099 | Housing |
| 3 | 8300229 | Light diode |
| 4 | 7400115 | Microswitch |
| 5 | 7400115 | Microswitch |
| 6 | 2816130 | Leaf spring |
| 7 | 3454170 | Bottom piece |
| | 3947518 | Tape |
| 8 | 8340084 | Transistor |
| 9 | 3103077 | Foot |

## NOT SHOWN PARTS

| | |
|---|---|
| 6271048 | Mains lead |
| 6170184 | Pickup lead with 5 pol. DIN socket |
| 6273751 | Lead black with housing |
| 7210057 | Housing 6 pol. |
| 7500076 | Contact pin |
| 6273724 | Frame lead for 5513 |
| 3391384 | Outer carton |
| 3391385 | Top/bottom insert |
| 3397157 | Foam packing - lid insert |
| 3397158 | Foam packing left |
| 3397159 | Foam packing right |
| 3535052 | Instruction diagram 5511-5512 |
| 3535053 | Instruction diagram 5513 |
| 3535054 | Instruction diagram 5514-5515 |

BoCollectors.com

ELECTRICAL PARTS LIST

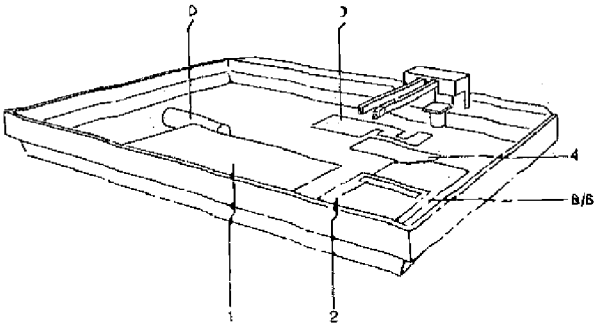


## 8005016 PC 1

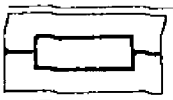

| | | |
|---|---|---|
| 1R1 | 5002028 | 2K2 Ohms 10% 1W |
| 1R2 | 5002026 | 1K5 Ohms 10% 1W |
| 1R3 | 5010048 | 4K7 Ohms 5% 1/8W |
| 1R4 | 5010061 | 56 KOhms 5% 1/8W |
| 1R5 | 5010092 | 220 Ohms 5% 1/8W |
| 1R6 | 5010091 | 82 KOhms 5% 1/8W |
| 1R7 | 5010135 | 18 KOhms 5% 1/8W |
| 1R8 | 5001038 | 4K7 Ohms 10% 1/2W |
| 1R9 | 5010072 | 180 KOhms 5% 1/8W |
| 1R10 | 5010091 | 82 KOhms 5% 1/8W |
| 1R11 | 5010071 | 560 KOhms 5% 1/8W |
| 1R12 | 5001021 | 330 Ohms 10% 1/2W |
| 1R13 | 5100198 | 10 Ohms 10% 4W TE |
| 1R14 | 5370058 | 5 KOhms 20% LIN. |
| 1R15 | 5370058 | 5 KOhms 20% LIN. |
| 1R16 | 5010052 | 680 Ohms 5% 1/8W |
| 1R17 | 5010059 | 10 KOhms 5% 1/8W |
| 1R18 | 5010060 | 39 KOhms 5% 1/8W |
| 1R19 | 5010045 | 47 KOhms 5% 1/8W |
| 1R20 | 5010091 | 82 KOhms 5% 1/8W |
| 1R21 | 5010000 | 270 Ohms 5% 1/8W |
| 1R23 | 5010068 | 820 Ohms 5% 1/8W |
| 1R24 | 5010049 | 100 KOhms 5% 1/8W |
| 1R25 | 5010117 | 330 KOhms 5% 1/8W |
| 1R26 | 5010054 | 1 MOhms 5% 1/8W |
| 1R27 | 5010053 | 15 KOhms 5% 1/8W |
| 1R28 | 5010053 | 15 KOhms 5% 1/8W |
| 1R29 | 5010053 | 15 KOhms 5% 1/8W |
| 1R30 | 5010045 | 47 KOhms 5% 1/8W |
| 1R31 | 5010154 | 8K2 Ohms 5% 1/8W |
| 1R32 | 5010049 | 100 KOhms 5% 1/8W |
| 1R33 | 5010072 | 180 KOhms 5% 1/8W |
| 1R34 | 5010054 | 1 MOhms 5% 1/8W |
| 1R35 | 5010076 | 3K3 Ohms 5% 1/8W |
| 1R36 | 5002018 | 270 Ohms 10% 1W |
| 1R37 | 5010071 | 560 KOhms 5% 1/8W |
| 1R38 | 5010066 | 1K8 Ohms 5% 1/8W |
| 1R39 | 5010049 | 100 KOhms 5% 1/8W |
| 1R40 | 5001085 | 22 MOhms 10% 1/2W |
| 1R41 | 5010065 | 100 Ohms 5% 1/8W |
| 1R42 | 5010049 | 100 KOhms 5% 1/8W |
| 1R43 | 5010054 | 1 MOhms 5% 1/8W |
| 1R44 | 5010117 | 330 KOhms 5% 1/8W |
| 1R45 | 5010054 | 1 MOhms 5% 1/8W |
| 1R46 | 5010117 | 330 KOhms 5% 1/8W |
| 1R47 | 5010065 | 100 Ohms 5% 1/8W |
| 1R48 | 5010049 | 100 KOhms 5% 1/8W |
| 1R49 | 5010040 | 1 KOhms 5% 1/8W |
| 1R50 | 5010059 | 10 KOhms 5% 1/8W |
| 1R51 | 5010049 | 100 KOhms 5% 1/8W |
| 1R52 | 5010298 | 1K7 Ohms 5% 1/8W |
| 1R53 | 5010154 | 8K2 Ohms 5% 1/8W |
| 1R54 | 5010048 | 22 Ohms 5% 1/8W |
| 1R55 | 5010042 | 12 KOhms 5% 1/8W |
| 1R56 | 5370068 | 25 KOhms 20% 0,1 W LIN. |
| 1R57 | 5370068 | 25 KOhms 20% 0,1 W LIN. |
| 1R58 | 5010045 | 47 KOhms 5% 1/8W |
| 1R61 | 5010059 | 10 KOhms 5% 1/8W |
| 1R62 | 5010083 | 270 KOhms 5% 1/8W |
| 1R63 | 5010071 | 560 KOhms 5% 1/8W |
| 1R64 | 5010059 | 10 KOhms 5% 1/8W |
| 1R65 | 5010117 | 330 KOhms 5% 1/8W |
| 1R66 | 5010049 | 100 KOhms 5% 1/8W |
| 1R67 | 5010059 | 10 KOhms 5% 1/8W |
| 1R68 | 5010072 | 180 KOhms 5% 1/8W |
| 1R69 | 5010072 | 180 KOhms 5% 1/8W |
| 1R70 | 5010072 | 180 KOhms 5% 1/8W |
| 1R71 | 5010072 | 180 KOhms 5% 1/8W |
| 1R72 | 5010072 | 180 KOhms 5% 1/8W |
| 1R73 | 5010071 | 560 KOhms 5% 1/8W |
| 1R74 | 5010071 | 560 KOhms 5% 1/8W |
| 1R75 | 5010071 | 560 KOhms 5% 1/8W |
| 1R76 | 5010071 | 560 KOhms 5% 1/8W |
| 1R77 | 5010071 | 560 KOhms 5% 1/8W |
| 1R78 | 5010072 | 180 KOhms 5% 1/8W |
| 1R79 | 5010072 | 180 KOhms 5% 1/8W |
| 1R80 | 5010079 | 22 KOhms 5% 1/8W |
| 1R81 | 5010091 | 82 KOhms 5% 1/8W |
| 1R82 | 5010054 | 1 MOhms 5% 1/8W |
| 1R83 | 5010120 | 220 KOhms 5% 1/8W |
| 1R84 | 5010135 | 18 KOhms 5% 1/8W |
| 1R85 | 5010048 | 4K7 Ohms 5% 1/8W |
| 1R86 | 5010048 | 4K7 Ohms 5% 1/8W |
| 1R87 | 5002024 | 1 KOhms 10% 1W |
| 1R88 | 5370068 | 25 KOhms 20% 0,1 W LIN. |
| 1R89 | 5010092 | 220 Ohms 5% 1/8W |
| 1R90 | 5010049 | 100 KOhms 5% 1/8W |
| 1R91 | 5010049 | 100 KOhms 5% 1/8W |
| 1R92 | 5010135 | 18 KOhms 5% 1/8W |
| 1R93 | 5010045 | 47 KOhms 5% 1/8W |
| 1R94 | 5010059 | 10 KOhms 5% 1/8W |

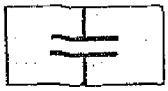

| | | |
|---|---|---|
| 1C1 | 4200169 | 0,1 µF 35V TANT. |
| 1C2 | 4200192 | 10µF 63V |
| 1C3 | 4130142 | 220 nF 5% 100V |
| 1C4 | 4010060 | 22 nF —20 +100% 40V |
| 1C5 | 4200285 | 4µ7F 63V |
| 1C6 | 4010060 | 22 nF —20 +100% 40V |
| 1C7 | 4130078 | 47 nF 20% 250V |
| 1C8 | 4201058 | 0µ47F 35V TANT. |
| 1C9 | 4130103 | 100 nF 20% 250V |
| 1C10 | 4200285 | 0µ47F 63V |
| 1C11 | 4200016 | 20µF 25V |
| 1C12 | 4201069 | 2µ2F 35V |
| 1C13 | 4130103 | 100 nF 20% 250V |
| 1C14 | 4130103 | 100 nF 20% 250V |
| 1C15 | 4130082 | 220 nF 20% 250V |
| 1C16 | 4200169 | 0,1 µF 35V TANT. |
| 1C17 | 4011025 | 3n3 10% 100V |
| 1C18 | 4201057 | 1 µF 35V TANT. |
| 1C19 | 4200108 | 4µ7F 25V TANT. |
| 1C20 | 4201057 | 1 µF 35V TANT. |
| 1C21 | 4200108 | 4µ7F 25V TANT. |
| 1C22 | 4200108 | 4µ7F 25V TANT. |
| 1C23 | 4200171 | 100 µF 1V |

BeoCollector.com

| | | |
|---|---|---|
| 1C25 | 4011025 | 3n3F 10% 100V |
| 1C27 | 4011025 | 3n3F 10% 100V |
| 1C28 | 4130082 | 220 nF 20% 250V |
| 1C29 | 4011025 | 3n3F 10% 100V |
| 1C30 | 4130082 | 220 nF 20% 250V |
| 1C31 | 4011025 | 3n3F 10% 100V |
| 1C32 | 4201069 | 2u2F 35V TANT. |
| 1C33 | 4201057 | 1 µF 35V TANT. |
| 1C34 | 4130103 | 100 nF 20% 250V |
| 1C35 | 4011025 | 3n3F 10% 100V |
| 1C36 | 4201057 | 1 µF 35V TANT. |

| | |
|---|---|
| 1RL1 | 7600007 |

**8005013 PC 3**

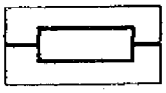

| | | |
|---|---|---|
| 3R1 | 5010059 | 10 KOhms 5% 1/8W |

**8005017 PC 4**

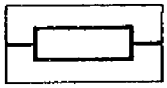

| | | |
|---|---|---|
| 4R1 | 5010059 | 10 KOhms 5% 1/8W |
| 4R2 | 5010059 | 10 KOhms 5% 1/8W |

| | | |
|---|---|---|
| 4C1 | 4010041 | 1 nF −20 +100% 40V |
| 4C2 | 4010041 | 1 nF −20 +100% 40V |

BeoCollectors.com

## TRANSISTOR - DIODE - IC (DIAGRAM 1)

| | | | | | | | |
|---|---|---|---|---|---|---|---|
| 1TR1 | 8320097 | 8320097 | 20 | BC547B | 8320266 | 33 | TIP 31 |
| 1TR2 | 8320266 | | 18 | BC237B | | | |
| 1TR3 | 8320285 | | 20 | BC171B | 8320285 | 20 | BC183C |
| 1TR4 | 8320161 | | 19 | BC317B | | | |
| 1TR5 | 8320295 | | 20 | BC182B | 8320295 | 20 | BC 337-25 |
| 1TR6-1TR17 | 8320097 | | 20 | BC237B | | | |
| 1TR18 | 8320161 | | 1 | BC207B | | | |
| 1TR19 | 8320097 | | | | | | |
| 1TR20 | 8320134 | 8320134 | 10 | BC144/143 | | | |
| 1TR21 | 8320161 | | 10 | MM3005/4005 | | | |
| 1TR22-1TR23 | 8320134 | | 10 | BC142/143 | | | |
| 1TR24 | 8320097 | | | | | | |
| 1TR25 | 8320134 | 8320161 | 20 | BC212B | | | |
| 1TR26 | 8320161 | | 20 | BC251B | | | |

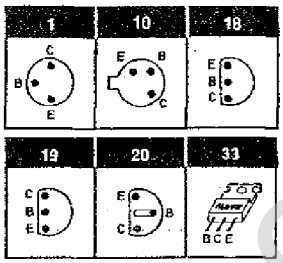


| | | | | | |
|---|---|---|---|---|---|
| 0D1 | 8300252 | B80C800 | 1D17 | 8300053 | ZPD 15V 5% |
| | | | | | BZX 79 15V |
| 1D1-1D4 | 8300025 | 1N 4003 | | | |
| | | 1N4002 | 1D20 | 8300101 | BAX 16 |
| | | EM 502 | | | |
| | | | 1D49 | 8300135 | ZPD 3,3V 5% |
| 1D7 | 8300033 | ZPD 22V 5% | | | BZY 88 3,3V |
| | | BZX 79 22V | | | |
| | | | 4D1 | 8300229 | 203 TIL 32 |
| 1D13 | 8300028 | ZPD 9,1V 5% | | | 203 OP 160 |
| | | BZX 79 9,1V | | | 204 TIL 31 |
| | | | | | 204 1A 48B |
| 1D16 | 8300201 | ZPD 6,2V 5% | | | 205 LD 241T |
| | | BZX 79 6,2V | OTHER | | |
| | | | DIODES | 8300058 | 1N4148 |
| | | | | | SFD 184 |

| | | | | | |
|---|---|---|---|---|---|
| 1IC1 | 8340026 | 33 TIP 120 | 1IC4 | 8340024 | 33 TIP 125 |
| 1IC2 | 8340028 | 19 MPS A13 | 4IC1 | 8340084 | 110 SRD 212 |
| | | 19 SPS 5418 | | | |
| 1IC3 | 8340083 | 109 C1003 | | | |

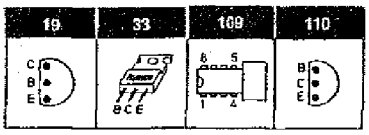


## MEASURING CONDITIONS FOR DIAGRAM 1

All DC voltages are positive in proportion to chassis and they are measured with rotating turntable and raised pick-up arm and with the detector arm over a record. The voltages are measured by voltmeter and an inner resistor of at least 2 MOhms.

The stated impulses of the detector arm circuit are measured with rotating turntable and with the detector arm over the ribs without any record on.

Oscillograms marked RUN-OFF STOP are measured with pick-up arm lowered into an outlet groove, rise approx. 3 mm/turns, 30 cm record.

## SYMBOLS

As a supplement to the measuring specification symbols from the operating panel are used to indicate that a DC voltage in a circuit changes from one level to another e.g.

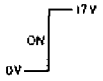


This symbol indicates that the voltage goes from 0 to 17 V when activating panel switch ON.

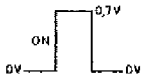


This symbol indicates that the voltage goes from 0 to 0,7 V, as long as the ON switch is activated, whereafter the voltage goes to 0 again.

BeoCollectors.com

ELECTRIC PARTS LIST

## 8005015 PC 6

| | | |
|---|---|---|
| 6R1 (201) | 5010040 | 1 KOhms 5% 1/8W |
| 6R2 (202) | 5010665 | 1M2Ohms 5% 1/8W |
| 6R3 (203) | 5010049 | 100 KOhms 5% 1/8W |
| 6R4 (204) | 5010070 | 390 Ohms 5% 1/8W |
| 6R5 (205) | 5010063 | 150 KOhms 5% 1/8W |
| 6R6 (206) | 5370197 | 1 KOhms 20% 0,1 W |
| 6R7 (207) | 5010154 | 8K2Ohms 5% 1/8W |
| 6R8 (208) | 5010052 | 6K8Ohms 5% 1/8W |
| 6R9 (209) | 5010120 | 220 KOhms 5% 1/8W |
| 6R10 (210) | 5010135 | 18 KOhms 5% 1/8W |
| 6R11 (211) | 5370198 | 4K7 Ohms 20% 0,1W |
| 6R12 (212) | 5010067 | 560 Ohms 5% 1/8W |
| 6R13 (213) | 5010041 | 5K6 Ohms 5% 1/8W |
| 6R14 (214) | 5010052 | 6K8Ohms 5% 1/8W |
| 6R15 (215) | 5010053 | 15 KOhms 5% 1/8W |
| 6R16 (216) | 5010059 | 10 KOhms 5% 1/8W |
| 6R17 (217) | 5010063 | 150 KOhms 5% 1/8W |
| 6R18 (218) | 5010079 | 22 KOhms 5% 1/8W |
| 6R19 (219) | 5010079 | 22 KOhms 5% 1/8W |
| 6R20 (220) | 5010040 | 1 KOhms 5% 1/8W |
| 6R21 (221) | 5010040 | 1 KOhms 5% 1/8W |
| 6R22 (222) | 5010076 | 3K3Ohms 5% 1/8W |
| 6R23 (223) | 5010064 | 2K2Ohms |
| 6R24 (224) | 5010135 | 18 KOhms 5% 1/8W |
| 6R25 (225) | 5010076 | 3K3Ohms 5% 1/8W |
| 6R26 (226) | 5010067 | 560 Ohms 5% 1/8W |
| 6R27 (227) | 5010069 | 3K9Ohms 5% 1/8W |
| 6R28 (228) | 5010141 | 27 KOhms 5% 1/8W |
| 6R29 (229) | 5010141 | 27 KOhms 5% 1/8W |
| 6R30 (230) | 5010141 | 27 KOhms 5% 1/8W |
| 6R31 (231) | 5010041 | 5K6Ohms 5% 1/8W |
| 6R32 (232) | 5010079 | 22 KOhms 5% 1/8W |
| 6R33 (233) | 5010049 | 100 KOhms 5% 1/8W |
| 6R34 (234) | 5010079 | 22 KOhms 5% 1/8W |
| 6R35 (235) | 5010041 | 5K6Ohms 5% 1/8W |
| 6R36 (236) | 5010042 | 12 KOhms 5% 1/8W |
| 6R37 (237) | 5010074 | 680 KOhms 5% 1/8W |
| 6R38 (238) | 5010072 | 180 KOhms 5% 1/8W |
| 6R39 (239) | 5010059 | 10 KOhms 5% 1/8W |
| 6R40 (240) | 5010076 | 3K3Ohms 5% 1/8W |
| 6R41 (241) | 5010452 | 150 Ohms 5% 1/8W |
| 6R42 (242) | 5010044 | 330 Ohms 5% 1/8W |
| 6R43 (243) | 5370191 | 10 KOhms 20% 0,1W |
| 6R44 (244) | 5010061 | 56 KOhms 5% 1/8W |
| 6R45 (245) | 5010061 | 56 KOhms 5% 1/8W |
| 6R46 (246) | 5010076 | 3K3Ohms 5% 1/8W |
| 6R47 (247) | 5010052 | 6K8Ohms 5% 1/8W |
| 6R48 (248) | 5010052 | 6K8Ohms 5% 1/8W |
| 6R49 (249) | 5010040 | 1 KOhms 5% 1/8W |
| 6R50 (250) | 5010049 | 100 KOhms 5% 18W |
| 6R51 (251) | 5010079 | 22 KOhms 5% 1/8W |
| 6R52 (252) | 5010079 | 22 KOhms 5% 1/8W |
| 6R53 (253) | 5010072 | 180 KOhms 5% 1/8W |
| 6R54 (254) | 5010060 | 39 KOhms 5% 1/8W |
| 6R55 (255) | 5010052 | 6K8Ohms 5% 1/8W |
| 6R56 (256) | 5010135 | 18 KOhms 5% 1/8W |
| 6R57 (257) | 5010073 | 390 KOhms 5% 1/8W |
| 6R58 (258) | 5010045 | 47 KOhms 5% 1/8W |
| 6R59 (259) | 5010154 | 8K2Ohms 5% 1/8W |
| 6R60 (260) | 5010065 | 100 Ohms 5% 1/8W |
| 6R61 (261) | 5010077 | 470 KOhms 5% 1/8W |
| 6R62 (262) | 5010049 | 100 KOhms 5% 1/8W |
| 6R63 (263) | 5010063 | 150 KOhms 5% 1/8W |
| 6R64 (264) | 5010141 | 27 KOhms 5% 1/8W |
| 6R65 (265) | 5370196 | 22 KOhms 20% 0,1W |
| 6R66 (266) | 5010154 | 8K2Ohms 5% 1/8W |
| 6R67 (267) | 5010083 | 270 KOhms 5% 1/8W |
| 6R68 (268) | 5010060 | 39 KOhms 5% 1/8W |
| 6R69 (269) | 5010048 | 4K7Ohms 5% 1/2W |
| 6R70 (270) | 5010128 | 120 Ohms 5% 1/8W |
| 6R71 (271) | 5010061 | 56 KOhms 5% 1/8W |
| 6R72 (272) | 5010141 | 27 KOhms 5% 1/8W |
| 6R73 (273) | 5010049 | 100 KOhms 5% 1/8W |
| 6R74 (274) | 5010049 | 100 KOhms 5% 1/8W |
| 6R75 (275) | 5010141 | 27 KOhms 5% 1/8W |
| 6R76 (276) | 5370196 | 22 KOhms 20% 0,1W |
| 6R77 (277) | 5010079 | 22 KOhms 5% 1/8W |
| 6R78 (278) | 5010079 | 22 KOhms 5% 1/8W |
| 6R79 (279) | 5010079 | 22 KOhms 5% 1/8W |
| 6R80 (280) | 5010041 | 5K6Ohms 5% 1/8W |
| 6R81 (281) | 5010079 | 22 KOhms 5% 1/8W |
| 6R82 (282) | 5010079 | 22 KOhms 5% 1/8W |
| 6R83 (283) | 5010047 | 120 KOhms 5% 1/8W |
| 6R84 (284) | 5010047 | 120 KOhms 5% 1/8W |
| 6R85 (285) | 5010079 | 22 KOhms 5% 1/8W |
| 6R86 (286) | 5010054 | 1 MOhms 5% 1/8W |
| 6R87 (287) | 5010054 | 1 MOhms 5% 1/8W |
| 6R88 (288) | 5010054 | 1 MOhms 5% 1/8W |
| 6R89 (289) | 5010054 | 1 MOhms 5% 1/8W |
| 6R90 (290) | 5010073 | 390 KOhms 5% 1/8W |
| 6R91 (291) | 5010079 | 22 KOhms 5% 1/8W |
| 6R100 | 5001021 | 330 Ohms 10% 1/2W |
| 6R101 | 5010064 | 2K2Ohms 5% 1/8W |
| 6R102 | 5010041 | 5K6Ohms 5% 1/8W |
| 6R103 | 5010059 | 10KOhms 5% 1/8W |
| 6R104 | 5010040 | 1 KOhms 5% 1/8W |
| 6R105 | 5010045 | 47 KOhms 5% 1/8W |
| 6R106 | 5010059 | 10 KOhms 5% 1/8W |
| 6R107 | 5020095 | 13K3Ohms 5% 1/8W |
| 6R108 | 5020093 | 4K64Ohms 5% 1/8W |
| 6R109 | 5010076 | 3K3Ohms5% 1/8W |
| 6R110 | 5010154 | 8K2Ohms 5% 1/8W |
| 6R111 | 5010062 | 68 KOhms 5% 1/8W |
| 6R112 | 5010135 | 18 KOhms 5% 1/8W |
| 6R113 | 5010045 | 47 KOhms 5% 1/8W |
| 6R114 | 5010048 | 4K7Ohms 5% 1/8W |
| 6R115 | 5010049 | 100 KOhms 5% 1/8W |
| 6R116 | 5010076 | 3K3Ohms 5% 1/8W |
| 6R117 | 5010039 | 68 Ohms 5% 1/8W |
| 6R118 | 5010052 | 6K8Ohms 5% 1/8W |
| 6R119 | 5010153 | 1K2Ohms 5% 1/8W |
| 6R120 | 5010064 | 2K2Ohms 5% 1/8W |
| 6R121 | 5010049 | 100 KOhms 5% 1/8W |
| 6R122 | 5010054 | 1MOhms 20% 0,1W |
| 6R123 | 5010040 | 1KOhms 5% 1/8W |
| 6R124 | 5010079 | 22 KOhms 5% 1/8W |

| | | |
|---|---|---|
| 6C1 (201) | 4200333 | 1 µF 63V |
| 6V2 (202) | 4010021 | 220 pF 10% 100V |
| 6C3 (203) | 4011025 | 3n3F 10% 100V |
| 6C4 (204) | 4200101 | 10 µF 16V TANT. |
| 6C5 (205) | 4130109 | 10 nF 10% 250V |
| 6C6 (206) | 4010027 | 1 nF 10% 100V |
| 6C7 (207) | 4010027 | 1 nF 10% 100V |
| 6C8 (208) | 4010024 | 470 pF 10% 100V |
| 6C9 (209) | 4010027 | 1 nF 10% 100V |
| 6C10 (210) | 4010027 | 1 nF 10% 100V |
| 6C11 (211) | 4201058 | 0,47 µF 35V TANT. |
| 6C12 (212) | 4201057 | 1 µF 35V TANT. |
| 6C13 (213) | 4130109 | 10 nF 10% 250V |
| 6C14 (214) | 4010061 | 2n2 10% 63V |
| 6C15 (215) | 4010027 | 1 nF 10% 100V |
| 6C16 (216) | 4010065 | 2 n7F 10% 63V |
| 6C17 (217) | 4130141 | 8n2F 10% 250V |
| 6C18 (218) | 4010067 | 1n5F 10% 63V |
| 6C19 (219) | 4010064 | 5n6F 10% 63V |
| 6C20 (220) | 4010067 | 1n5F 10% |
| 6C21 (221) | 4000007 | 82 pF 2% 63V |
| 6C22 (222) | 4200108 | 4µ7F 25V TANT. |
| 6C23 (223) | 4200230 | 15 µF 16V TANT. |
| 6C24 (224) | 4130107 | 100 nF 10% 250V |
| 6C25 (225) | 4130109 | 10 nF 10% 250V |
| 6C26 (226) | 4010063 | 4n7F 10% 63V |
| 6C27 (227) | 4201057 | 1 µF 35V TANT. |
| 6C28 (228) | 4130111 | 150 nF 20% 250V |
| 6C29 (229) | 4201057 | 1 µF 35V TANT. |
| 6C30 (230) | 4011025 | 3n3F 10% 100V |
| 6C31 (231) | 4010060 | 22 nF —20 +100% |
| 6C32 (232) | 4200101 | 10 µF 16V TANT. |
| 6C33 (233) | 4130111 | 150 nF 20% 250V |
| 6C34 (234) | 4200101 | 10 µF 16V TANT. |
| 6C35 (235) | 4130089 | 22 nF 10% 250V |
| 6C36 (236) | 4130100 | 68 nF 10% 250V |
| 6C37 (237) | 4130100 | 68 nF 10% 250V |
| 6C38 (238) | 4130109 | 10 nF 10% 250V |
| 6C39 (239) | 4130100 | 68 nF 10% 250V |
| 6C40 (240) | 4201072 | 0,22 µF 35V TANT. |
| 6C41 (241) | 4010060 | 22 nF —20 +100% |
| 6C42 (242) | 4200317 | 47 µF 6,3V TANT. |
| 6C43 (243) | 4130143 | 18 nF 10% 250V |
| 6C44 (244) | 4010063 | 4n7F 10% 63V |
| 6C45 (245) | 4130119 | 39 nF 10% 250V |
| 6C46 (246) | 4130107 | 100 nF 10% 250V |
| 6C47 (247) | 4010063 | 4n7F 10% 63V |
| 6C48 (248) | 4200101 | 10 µF 16V TANT. |
| 6C49 (249) | 4010064 | 560 pF 10% 63V |
| 6C50 (250) | 4010067 | 1n5F 10% 63V |
| 6C51 (251) | 4000007 | 82 pF 2% 63V |
| 6C52 (252) | 4130100 | 68 nF 10% 250V |
| 6C53 (253) | 4130100 | 68nF 10% 250V |
| 6C54 (254) | 4130078 | 47 nF 20% 250V |
| (255) | 4130078 | 47 nF 20% 250V |
| 6C56 | 4000007 | 82 pF 2% 63V |
| 6C100 | 4200099 | 100 µF 16V |
| 6C101 | 4201057 | 1 µF 35V TANT. |
| 6C102 | 4200180 | 1000 µF 16V |
| 6C103 | 4201069 | 2µ2F 35V TANT. |
| 6C104 | 4200171 | 100 µF 3V TANT. |
| 6C105 | 4010027 | 1n 10% 100V |

| | | |
|---|---|---|
| 6L1 (201) | 8022054 | |

| | | |
|---|---|---|
| 6IL100 | 8230044 | 24V 25 mA |

## 8005014 PC 8

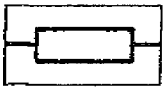

| | | |
|---|---|---|
| 8R1 | 5010049 | 100 KOhms 5% 1/8W |
| 8R2 | 5370049 | 1 MOhms 20% 0,1W |
| 8R3 | 5010040 | 1 KOhms 5% 1/8W |

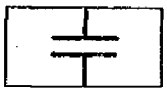

| | | |
|---|---|---|
| 8C1 | 4200098 | 100 µF 6,3V |

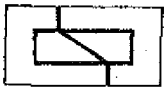

| | | |
|---|---|---|
| 8RL1 | 7600007 | |

ecollector.com

MODIFICATIONS — SERVICE TIPS

**Automatic lowering**

It has turned out that in some cases the charging of 1C19 in the automatic lowering circuit is not enough to secure that the pickup-arm does not lower when the detector arm reaches the blank field on the turntable without record.
To solve this problem 1C20 has been changed from 4.7 to 1 µF.
The change has been introduced from apparatus No. 1167004.
Furthermore, 1C26 from base 1TR13 to chassis has been left out to secure that manual lowering works at fast out-transport of the pickup-arm.

**Detector arm circuit**

Because of tolerances in OPH1, 1TR3 has been changed into a transistor with greater current amplification from index. No. 8320097 to index No. 8320285.
the change has been introduced in production as from No. 1168008.
For a transitional period (from set No. 1168008 to No. 1175021) 1R26 has been changed from 1 Mohm into 4.7 Mohms.
If the arm does not lower by some record types, 1R26 can be changed into 1 Mohm.

**Mounting of leads in the pickup-arm**

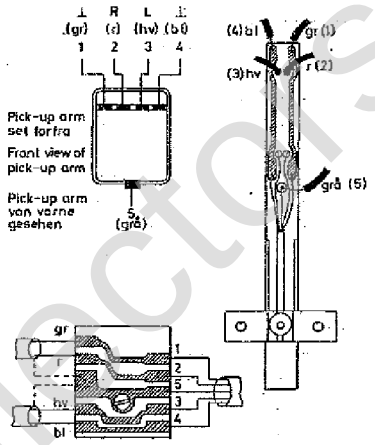


BeoCollectors.com

## TRANSISTOR - DIODE - IC (DIAGRAM 2)

| | | | | | | | | |
|---|---|---|---|---|---|---|---|---|
| 6TR1 (201) | 8320137 | | 6TR14 (214) | 8320137 | | 8320137 | 20 | BC 137B |
| 6TR2 (202) | 8320137 | | 6TR15 (215) | 8320366 | | | | |
| 6TR3 (203) | 8320161 | | 6TR16 (216) | 8320366 | | *8320161* | *20* | *BC212B* |
| 6TR4 (204) | 8320137 | | 6TR100 | 8320323 | | | 20 | BC 251B |
| 6TR5 (205) | 8320366 | | 6TR101 | 8320323 | | | | |
| 6TR6 (206) | 8320137 | | 6TR102 | 8340026 | | 8320323 | 19 | MPS A05 |
| 6TR7 (207) | 8320354 | | 6TR103 | 8320323 | | | | |
| 6TR8 (208) | 8320137 | | 6TR104 | 8340054 | | 8320354 | 21 | SK 30A |
| 6TR9 (209) | 8320137 | | 6TR105 | 8320137 | | | | |
| 6TR10 (210) | 8320137 | | 6TR106 | 8320323 | | 8320366 | 19 | MPS A16 |
| 6TR11 (211) | 8320354 | | 6TR107 | 8320323 | | | | |
| 6TR12 (212) | 8320137 | | 6TR108 | 8340054 | | 8340026 | 33 | TIP 120 |
| 6TR13 (213) | 8320354 | | | | | | | |
| | | | | | | 8340054 | 19 | MPS A13 |

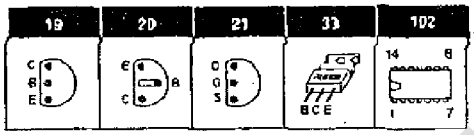


| | | | | | | | | |
|---|---|---|---|---|---|---|---|---|
| 6D1 (201)- | | | 6D103 | 8300142 | AA 143 | 8D1 | 8300042 | OA 91 |
| 6D8 (206) | 8300142 | AA 143 | | | OA 47 | | | |
| | | OA 47 | | | | 8D2 | 8300058 | 1N4148 |
| | | | 6D104 | 8300131 | 1N 4148 | | | SFD 184 |
| 6D100 | 8300029 | ZPD 12V 5% | | | | | | |
| | | BZX 79 12V | 6D105 | 8300131 | 1N4148 | | | |
| 6D101 | 8300128 | ZPD 5,6V 5% | 6D106 | 8300142 | AA 143 | | | |
| | | BZX 79 5,6V | | | OA 47 | | | |
| 6D102 | 8300029 | ZPD 12V 5% | 6D107 | 8300131 | 1N4148 | | | |
| | | BZX 79 12V | | | | | | |
| | | | 6D108 | 8300131 | 1N4148 | | | |

| | | | |
|---|---|---|---|
| 6IC1 (201) | | | |
| 6IC1 (201) | 8340038 | 102 | LM 381 |
| 6IC2 (202) | 8340040 | 102 | LM 565 |
| 8IC1 | 8340028 | 19 | MPS A13 |
| | | 19 | SPS 5418 |

**MEASURING CONDITIONS FOR DIAGRAM 2**

The voltages indicated are positive in relation to ground and measured with CD-4 signal on the input, R6 and R206 in centre position (500 Ohms) and R11 and R211 on maximum.

Input: Sum 1 kHz 1,8 mV, differens 2 mV 30 kHz $\Delta f = 1{,}8$ kHz f mod = 1 kHz.

BeoCollectors.com

DIAGRAM 2 FOR BEOGRAM 4002
AND 4004

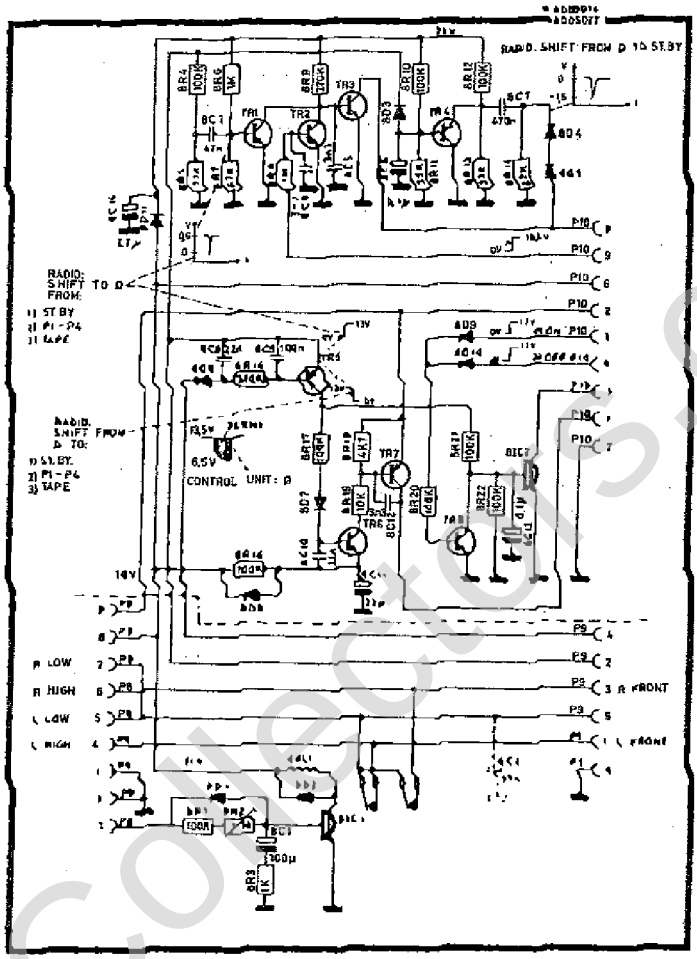


| TRANSISTOR AND IC LIST FOR DIAGRAM 2 | | | |
|---|---|---|---|
| 8IC1-8IC2 | 8340028 | 19 | MPSA 13 |
| | | 19 | TPSA 13 |
| 8TR1-8TR3 | 8320097 | 18 | BC 547 B |
| | | 18 | BC 182 B |
| | | 18 | BC 237 B |
| | | 18 | BC 171 B |
| 8TR4-8TR5 | 8320152 | 18 | BC 557 B |
| | | 18 | BC 212 B |
| | | 18 | BC 307 B |
| | | 18 | BC 251 B |
| 8TR6 | 8320097 | 18 | BC 547 B |
| | | 18 | BC 182 B |
| | | 18 | BC 237 B |
| | | 18 | BC 171 B |
| 8TR7 | 8320152 | 18 | BC 557 B |
| | | 18 | BC 212 B |
| | | 18 | BC 307 B |
| | | 18 | BC 251 B |
| 8TR8 | 8320097 | 18 | BC 547 B |
| | | 18 | BC 182 B |
| | | 18 | BC 237 B |
| | | 18 | BC 171 B |

| DIODE LIST FOR DIAGRAM 2 | | |
|---|---|---|
| 8D1 | 8300042 | OA 91 |
| 8D2-8D11 | 8300058 | IN 4148 |

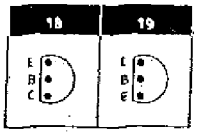


BeoCollectors.com

## TRANSISTOR AND IC LIST FOR DIAGRAM 1

| | | | |
|---|---|---|---|
| 1IC1 | 8340026 | 33 | TIP 120 |
| 1IC2 | 8340028 | 19 | MPSA 13 |
| | | 19 | TPSA 13 |
| 1IC3 | 8340083 | 109 | C 1003 |
| 1IC4 | 8340024 | 33 | TIP 125 |
| 1TR1 | 8320097 | 18 | BC 547 B |
| | | 18 | BC 182 B |
| | | 18 | BC 237 B |
| | | 18 | BC 171 B |
| 1TR2 | 8320266 | 33 | TIP 31 |
| 1TR3 | 8320285 | 18 | BC 548 C |
| | | 18 | BC 183 C |
| 1TR4 | 8320152 | 18 | BC 557 B |
| | | 18 | BC 212 B |
| | | 18 | BC 307 B |
| | | 18 | BC 251 B |
| 1TR5 | 8320295 | 20 | BC 337-25 |
| 1TR6-1TR17 | 8320097 | 18 | BC 547 B |
| | | 18 | BC 182 B |
| | | 18 | BC 237 B |
| | | 18 | BC 171 B |
| 1TR18 | 8320152 | 18 | BC 557 B |
| | | 18 | BC 212 B |
| | | 18 | BC 307 B |
| | | 18 | BC 251 B |
| 1TR19 | 8320097 | 18 | BC 547 B |
| | | 18 | BC 182 B |
| | | 18 | BC 237 B |
| | | 18 | BC 171 B |
| 1TR25/1TR20 | 8320135 | 10 | BC 143/144 |
| | | 10 | MM 3005/4005 |
| | | 10 | BC 142/143 |
| 1TR21 | 8320152 | 18 | BC 557 B |
| | | 18 | BC 212 B |
| | | 18 | BC 307 B |
| | | 18 | BC 251 B |
| 1TR22/1TR23 | 8320135 | 10 | BC 143/144 |
| | | 10 | MM 3005/4005 |
| | | 10 | BC 142/143 |
| 1TR24 | 8320097 | 18 | BC 547 B |
| | | 18 | BC 182 B |
| | | 18 | BC 237 B |
| | | 18 | BC 171 B |
| 1TR26 | 8320152 | 18 | BC 557 B |
| | | 18 | BC 212 B |
| | | 18 | BC 307 B |
| | | 18 | BC 251 B |
| 4IC1 | 8340084 | 17 | SRD 212 |

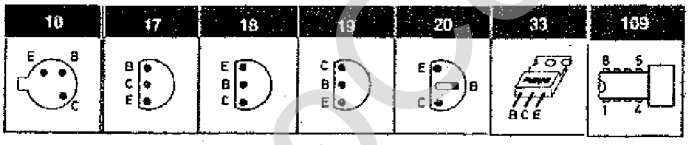


## DIODE LIST FOR DIAGRAM 1

| | | |
|---|---|---|
| 0D1 | 8300252 | B 80 C 800 |
| 1D1-1D4 | 8300023 | 1N 4002 |
| 1D5-1D6 | 8300058 | 1N 4148 |
| | | SFD 184 |
| 1D7 | 8300033 | ZPD 22 V 5% |
| | | BZX 79 22 V |
| 1D8-1D12 | 8300058 | 1N 4148 |
| | | SFD 184 |
| 1D13 | 8300028 | ZPD 9,1 V 5% |
| | | BZX 79 9,1 V |
| 1D14-1D15 | 8300058 | 1N 4148 |
| | | SFD 184 |
| 1D16 | 8300201 | ZPD 6,2 V 5% |
| | | BZX 79 6,2 V |
| 1D17 | 8300053 | ZPD 15 V 5% |
| | | BZX 79 15 V |
| 1D18-1D19 | 8300058 | 1N 4148 |
| | | SFD 184 |
| 1D20 | 8300101 | BAX 16 |
| 1D21-1D48 | 8300058 | 1N 4148 |
| | | SFD 184 |
| 1D49 | 8300135 | ZPD 3,3V 5% |
| | | BZX 88 3,3 V |
| 4D1 | 8300229 | OP 160 |

BeoCollectors.com

ELECTRICAL PARTS LIST

8005016/8005027 PC 1

| | | |
|---|---|---|
| 1R1 | 5002028 | 2K2 ohms 10% 1 W |
| 1R2 | 5002026 | 1K5 ohms 10% 1 W |
| 1R3 | 5010048 | 4K7 ohms 5% 1/8 W |
| 1R4 | 5010061 | 56 kohms 5% 1/8 W |
| 1R5 | 5010092 | 220 ohms 5% 1/8 W |
| 1R6 | 5010091 | 82 kohms 5% 1/8 W |
| 1R7 | 5010135 | 18 kohms 5% 1/8 W |
| 1R8 | 5001038 | 4K7 ohms 10% 1/2 W |
| 1R9 | 5010072 | 180 kohms 5% 1/8 W |
| 1R10 | 5010091 | 82 kohms 5% 1/8 W |
| 1R11 | 5010071 | 560 kohms 5% 1/8 W |
| 1R12 | 5001021 | 330 ohms 10% 1/2 W |
| 1R13 | 5100198 | 10 ohms 10% 4W TE |
| 1R14 | 5370058 | 5 kohms 20% LIN |
| 1R15 | 5370058 | 5 kohms 20% LIN |
| 1R16 | 5020112 | 6K8 ohms 1% 1/8 W |
| 1R17 | 5020059 | 10 kohms 1% 1/8 W |
| 1R18 | 5010060 | 39 kohms 5% 1/8 W |
| 1R19 | 5010045 | 47 kohms 5% 1/8 W |
| 1R20 | 5010091 | 82 kohms 5% 1/8 W |
| 1R21 | 5010000 | 270 ohms 5% 1/8 W |
| 1R23 | 5010068 | 820 ohms 5% 1/8 W |
| 1R24 | 5010049 | 100 kohms 5% 1/8 W |
| 1R25 | 5010120 | 220 kohms 5% 1/8 W |
| 1R26 | 5010054 | 1 Mohms 5% 1/8 W |
| 1R27 | 5010053 | 15 kohms 5% 1/8 W |
| 1R28 | 5010053 | 15 kohms 5% 1/8 W |
| 1R29 | 5010053 | 15 kohms 5% 1/8 W |
| 1R30 | 5010045 | 47 kohms 5% 1/8 W |
| 1R31 | 5010154 | 8K2 ohms 5% 1/8 W |
| 1R32 | 5010049 | 100 kohms 5% 1/8 W |
| 1R33 | 5010072 | 180 kohms 5% 1/8 W |
| 1R34 | 5010054 | 1Mohms 5% 1/8 W |
| 1R35 | 5010076 | 3K3 ohms 5% 1/8 W |
| 1R36 | 5002018 | 270 ohms |
| 1R37 | 5010071 | 560 kohms 5% 1/8 W |
| 1R38 | 5010066 | 1K8 ohms 5% 1/8 W |
| 1R39 | 5010049 | 100 kohms 5% 1/8 W |
| 1R40 | 5001085 | 22 Mohms 10% 1/2 W |
| 1R41 | 5010065 | 100 ohms 5% 1/8 W |
| 1R42 | 5010049 | 100 kohms 5% 1/8 W |
| 1R43 | 5010054 | 1 Mohms 5% 1/8 W |
| 1R44 | 5010117 | 330 kohms 5% 1/8 W |
| 1R45 | 5010054 | 1 Mohms 5% 1/8 W |
| 1R46 | 5010117 | 330 kohms 5% 1/8 W |
| 1R47 | 5010065 | 100 ohms 5% 1/8 W |
| 1R48 | 5010049 | 100 kohms 5% 1/8 W |
| 1R49 | 5010040 | 1 kohms 5% 1/8 W |
| 1R50 | 5010059 | 10 kohms 5% 1/8 W |
| 1R51 | 5010141 | 27 kohms 5% 1/8 W |
| 1R52 | 5010298 | 2K7 ohms 5% 1/8 W |
| 1R53 | 5010154 | 8K2 ohms 5% 1/8 W |
| 1R54 | 5010448 | 22 ohms 5% 1/8 W |
| 1R55 | 5010042 | 12 kohms 5% 1/8 W |
| 1R56 | 5370068 | 25 kohms 20% 0,1 W LIN |
| 1R57 | 5370068 | 25 kohms 20% 0,1 W LIN |
| 1R58 | 5010045 | 47 kohms 5% 1/8 W |
| 1R59 | 5010042 | 12 kohms 5% 1/8 W |
| 1R60 | 5010059 | 10 kohms 5% 1/8 W |
| 1R61 | 5010059 | 10 kohms 5% 1/8 W |
| 1R62 | 5010083 | 270 kohms 5% 1/8 W |
| 1R63 | 5010071 | 560 kohms 5% 1/8 W |
| 1R64 | 5010059 | 10 kohms 5% 1/8 W |
| 1R65 | 5010117 | 330 kohms 5% 1/8 W |
| 1R66 | 5010049 | 100 kohms 5% 1/8 W |
| 1R67 | 5010059 | 10 kohms 5% 1/8 W |
| 1R68 | 5010072 | 180 kohms 5% 1/8 W |
| 1R69 | 5010072 | 180 kohms 5% 1/8 W |
| 1R70 | 5010072 | 180 kohms 5% 1/8 W |
| 1R71 | 5010072 | 180 kohms 5% 1/8 W |
| 1R72 | 5010072 | 180 kohms 5% 1/8 W |
| 1R73 | 5010072 | 180 kohms 5% 1/8 W |
| 1R74 | 5010072 | 180 kohms 5% 1/8 W |
| 1R75 | 5010072 | 180 kohms 5% 1/8 W |
| 1R76 | 5010072 | 180 kohms 5% 1/8 W |
| 1R77 | 5010072 | 180 kohms 5% 1/8 W |
| 1R78 | 5010072 | 180 kohms 5% 1/8 W |
| 1R79 | 5010072 | 180 kohms 5% 1/8 W |
| 1R80 | 5010079 | 22 kohms 5% 1/8 W |
| 1R81 | 5010091 | 82 kohms 5% 1/8 W |
| 1R82 | 5010054 | 1 Mohm 5% 1/8 W |
| 1R83 | 5010120 | 220 kohms 5% 1/8 W |
| 1R84 | 5010135 | 18 kohms 5% 1/8 W |
| 1R85 | 5010048 | 4K7 ohms 5% 1/8 W |
| 1R86 | 5010048 | 4K7 ohms 5% 1/8 W |
| 1R87 | 5002024 | 1 kohm 10% 1W |
| 1R88 | 5370068 | 25 kohms 20% 0,1 W LIN |
| 1R89 | 5010092 | 220 ohms 5% 1/8 W |
| 1R90 | 5010049 | 100 kohms 5% 1/8 W |
| 1R91 | 5010049 | 100 kohms 5% 1/8 W |
| 1R92 | 5010135 | 18 kohms 5% 1/8 W |
| 1R93 | 5010042 | 12 kohms 5% 1/8 W |
| 1R94 | 5010059 | 10 kohms 5% 1/8 W |

| | | |
|---|---|---|
| 1C1 | 4200169 | 0,1μF 35 V TANT |
| 1C2 | 4200342 | 10μF 63 V |
| 1C3 | 4130142 | 220 nF 5% 100 V |
| 1C4 | 4010060 | 22 nF −20 +100% 40V |
| 1C5 | 4200322 | 4μ7F 63 V |
| 1C6 | 4010060 | 22 nF −20 +100% 40V |
| 1C7 | 4130078 | 47 nF 20% 250 V |
| 1C8 | 4201058 | 0,47μF 35 V TANT |
| 1C9 | 4130103 | 100 nF 20% 250 V |
| 1C10 | 4130106 | 330 nF 20% 100 V |
| 1C11 | 4200016 | 20μF 25 V |
| 1C12 | 4201069 | 2μ2F 35 V TANT |
| 1C13 | 4130103 | 100 nF 20% 250 V |
| 1C14 | 4130103 | 100 nF 20% 250 V |
| 1C15 | 4130082 | 220 nF 20% 250 V |
| 1C16 | 4200169 | 0,1μF 35 V TANT |
| 1C17 | 4011025 | 3n3F 10% 100 V |
| 1C18 | 4201057 | 1μF 35 V |
| 1C19 | 4200108 | 4μ7F 25 V |
| 1C20 | 4201057 | 1μF 35 V TANT |
| 1C21 | 4200108 | 4μ7F 25 V TANT |
| 1C22 | 4200108 | 4μ7F 25 V TANT |
| 1C23 | 4200171 | 100μF 3V TANT |
| 1C24 | 4010060 | 22 nF −2 +100% 40 V |
| 1C25 | 4011025 | 3n3 10% 100 V |
| 1C27 | 4011025 | 3n3 10% 100 V |
| 1C28 | 4130082 | 220 nF 20% 250 V |
| 1C29 | 4011025 | 3n3F 10% 100 V |
| 1C30 | 4130082 | 220 nF 20% 250 V |
| 1C31 | 4011025 | 3n3F 10% 100 V |
| 1C32 | 4201069 | 2μ2F 35 V TANT |
| 1C33 | 4201057 | 1μF 35 V TANT |
| 1C34 | 4130103 | 100 nF 20% 250 V |
| 1C35 | 4011025 | 3n3F 10% 100 V |
| 1C36 | 4200108 | 4μF 35 V TANT |

| | | |
|---|---|---|
| 1RL1 | 7600007 | |

BeoConnection.com

8005013 PC 3

| | | |
|---|---|---|
| 3R1 | 5010059 | 10 kohms 5% 1/8 W |

8005017 PC 4

| | | | | | |
|---|---|---|---|---|---|
| 4R1 | 5010059 | 10 kohms 5% 1/8 W | 4R2 | 5010059 | 10 kohms 5% 1/8 W |
| 4C1 | 4010041 | 1 nF −20 +100% 40 V | 4C2 | 4010041 | 1 nF −20 +100% 40 V |

8005014/8005022 PC8

| | | | | | |
|---|---|---|---|---|---|
| 8R1 | 5010049 | 100 kohms 5% 1/8 W | 8R12 | 5010049 | 100 kohms 5% 1/8 W |
| 8R2 | 5370049 | 1 Mohm 20% 0,1 W LIN | 8R13 | 5010075 | 33 kohms 5% 1/8 W |
| | | | 8R14 | 5010079 | 22 kohms 5% 1/8 W |
| 8R3 | 5010040 | 1 kohm 5% 1/8 W | 8R15 | 5010117 | 330 kohms 5% 1/8 W |
| 8R4 | 5010049 | 100 kohms 5% 1/8 W | 8R16 | 5010049 | 100 kohms 5% 1/8 W |
| 8R5 | 5010079 | 22 kohms 5% 1/8 W | 8R17 | 5010049 | 100 kohms 5% 1/8 W |
| 8R6 | 5010054 | 1 Mohms 5% 1/8 W | 8R18 | 5010048 | 4K7 ohms 5% 1/8 W |
| 8R7 | 5010045 | 47 kohms 5% 1/8 W | 8R19 | 5010059 | 10 kohms 5% 1/8 W |
| 8R8 | 5010054 | 1 Mohms 5% 1/8 W | 8R20 | 5010049 | 100 kohms 5% 1/8 W |
| 8R9 | 5010083 | 270 kohms 5% 1/8 W | 8R21 | 5010049 | 100 kohms 5% 1/8W |
| 8R10 | 5010049 | 100 kohms 5% 1/8 W | 8R22 | 5010049 | 100 kohms 5% 1/8 W |
| 8R11 | 5010060 | 39 kohms 5% 1/8 W | | | |
| 8C1 | 4200098 | 100µF 10 V | 8C9 | 4130150 | 100 nF 20% 100 V |
| 8C2 | 4130078 | 47 nF 20% 250 V | 8C10 | 4010060 | 22 nF −20 +100% 40 V |
| 8C3 | 4130078 | 47 nF 20% 250 V | | | |
| 8C4 | 4011025 | 3n3F 10% 100 V | 8C11 | 4200100 | 22µF 40 V |
| 8C5 | 4011025 | 3n3F 10% 100 V | 8C12 | 4011025 | 3n3F 10% 100 V |
| 8C6 | 4200169 | 0,1µF 35 V TANT | | | |
| 8C7 | 4130114 | 470 nF 10% 100 V | | | |
| 8C8 | 4010060 | 22 nF − 20 +100% 40 V | 8C13 | 4200169 | 0,1µF 35 TANT |
| | | | 8C14 | 4201069 | 2µ2 35 V TANT |
| 8RL1 | 7600007 | | | | |

BeoCollectors.com

Bang&Olufsen

MECHANICAL PARTS LIST

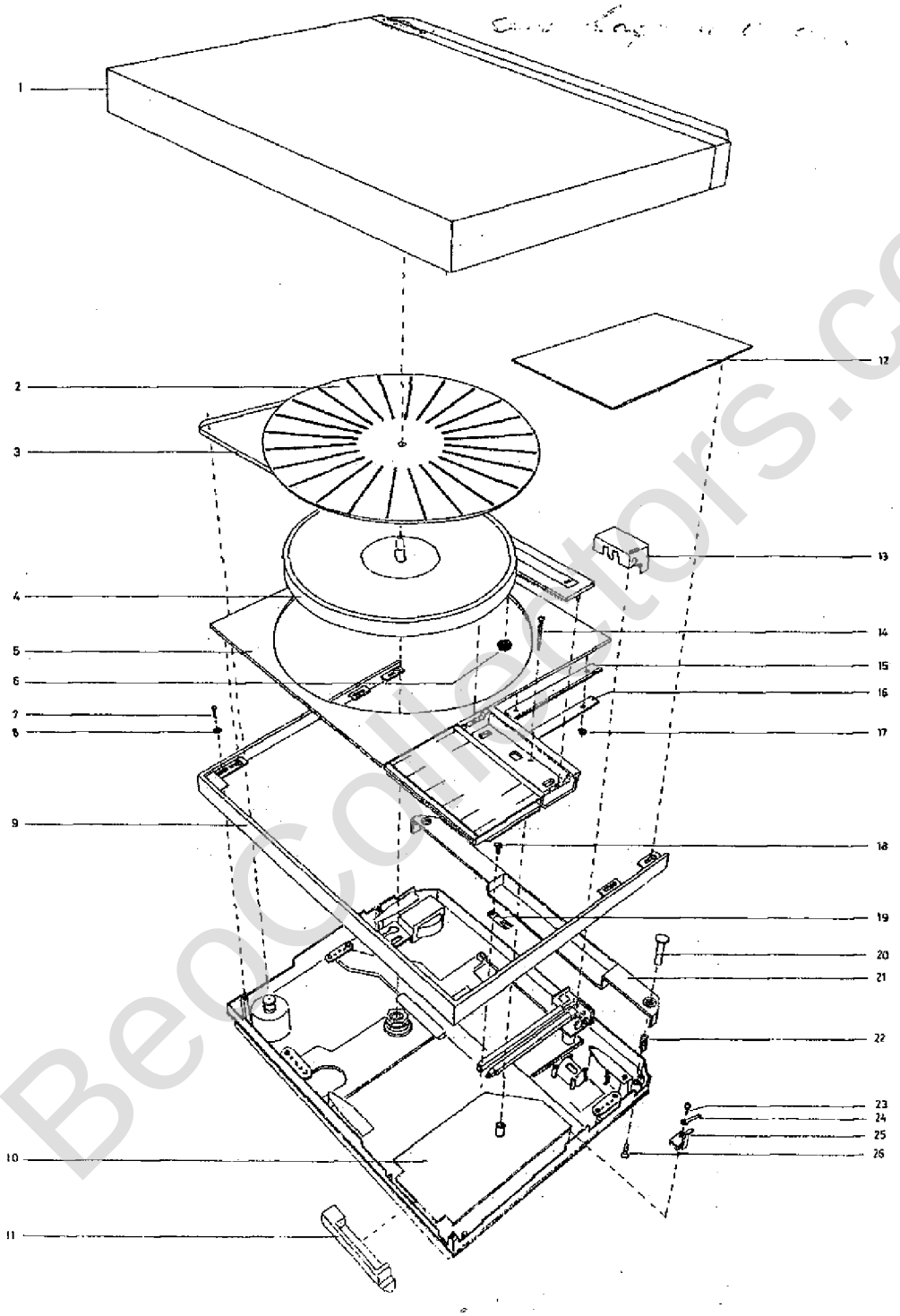


BeoCollectors.com

| | | |
|---|---|---|
| 1 | 3164184 | Dust cover complete |
| | 2560039 | Decorative list |
| 2 | 2726084 | Turntable |
| 3 | 2732018 | Driving belt |
| 4 | 2726089 | Turntable |
| 5 | 3458154 | Topplate |
| | | Plastic foil (transport) |
| 6 | 3912037 | Felt washer |
| 7 | 2013002 | Screw 2.9 x 6.5 DIN 7982 |
| 8 | 2803007 | Guide washer |
| 9 | 3412051 | Cabinet, teak |
| | 3412053 | Cabinet, rosewood |
| | 3412054 | Cabinet, oak |
| | 3412055 | Cabinet, white |
| 10 | 8005014 | PC unit 4002 |
| | 8005022 | PC unit 4004 |
| 11 | 3152159 | Holder |
| 12 | 3458114 | Topplate |
| | 3946018 | Plastic foil |
| 13 | 3164142 | Cover |
| | 3917022 | Foam (trans) |
| 14 | 2013088 | Screw 2.9 x 3 |
| 15 | 2816085 | Spring |
| 16 | 3014023 | Guiding plate |
| 17 | 2380093 | Nut, nylon |
| 18 | 2015903 | Screw 3.5 x 9.52 |
| 19 | 2816083 | Spring |
| 20 | 2994012 | Nut |
| 21 | 3452268 | Back piece |
| 22 | 2810066 | Spring |
| 23 | 2013206 | Screw 2.9 x 16 DIN |
| 24 | 7530008 | Solder tag |
| 25 | 3152135 | Lead holder |
| 26 | 2042216 | Screw 4 x 16 DIN 84 |

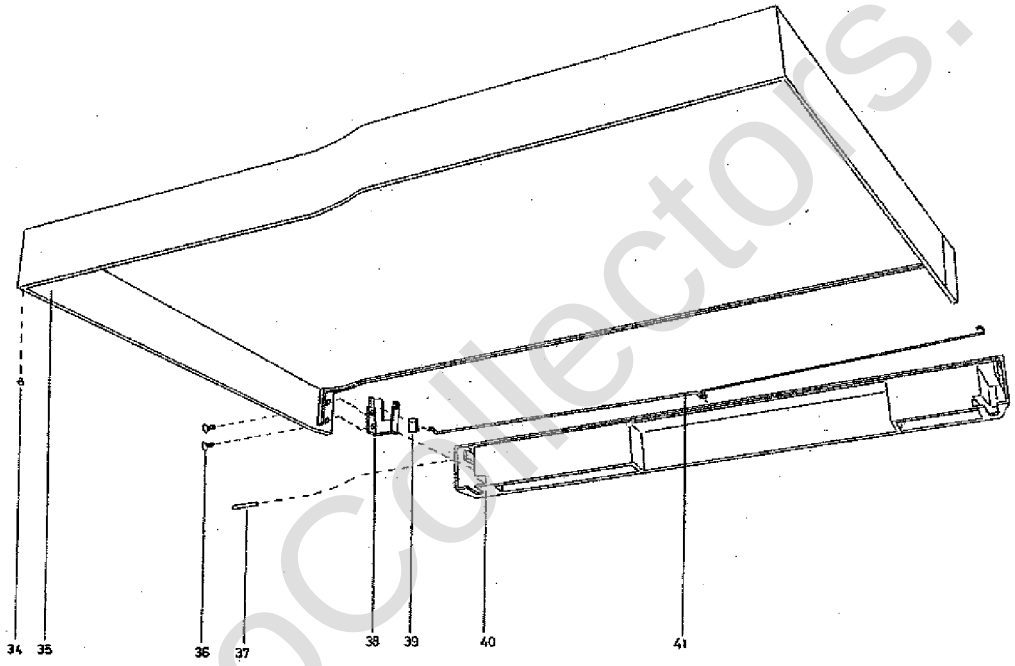


| | | |
|---|---|---|
| 34 | 3010007 | Stop |
| 35 | 3164190 | Lid |
| | 2560039 | Decorative list |
| 36 | 2038055 | Screw AM 3 x 6 DIN 963, black |
| 37 | 2830014 | Bearing needle |
| 38 | 3030023 | Hinge, left |
| | 3030022 | Hinge, right |
| 39 | 3015030 | Guiding piece |
| 40 | 3452145 | Back piece |
| 41 | 2819062 | Spring |

BeoCollectors.com

Bang & Olufsen

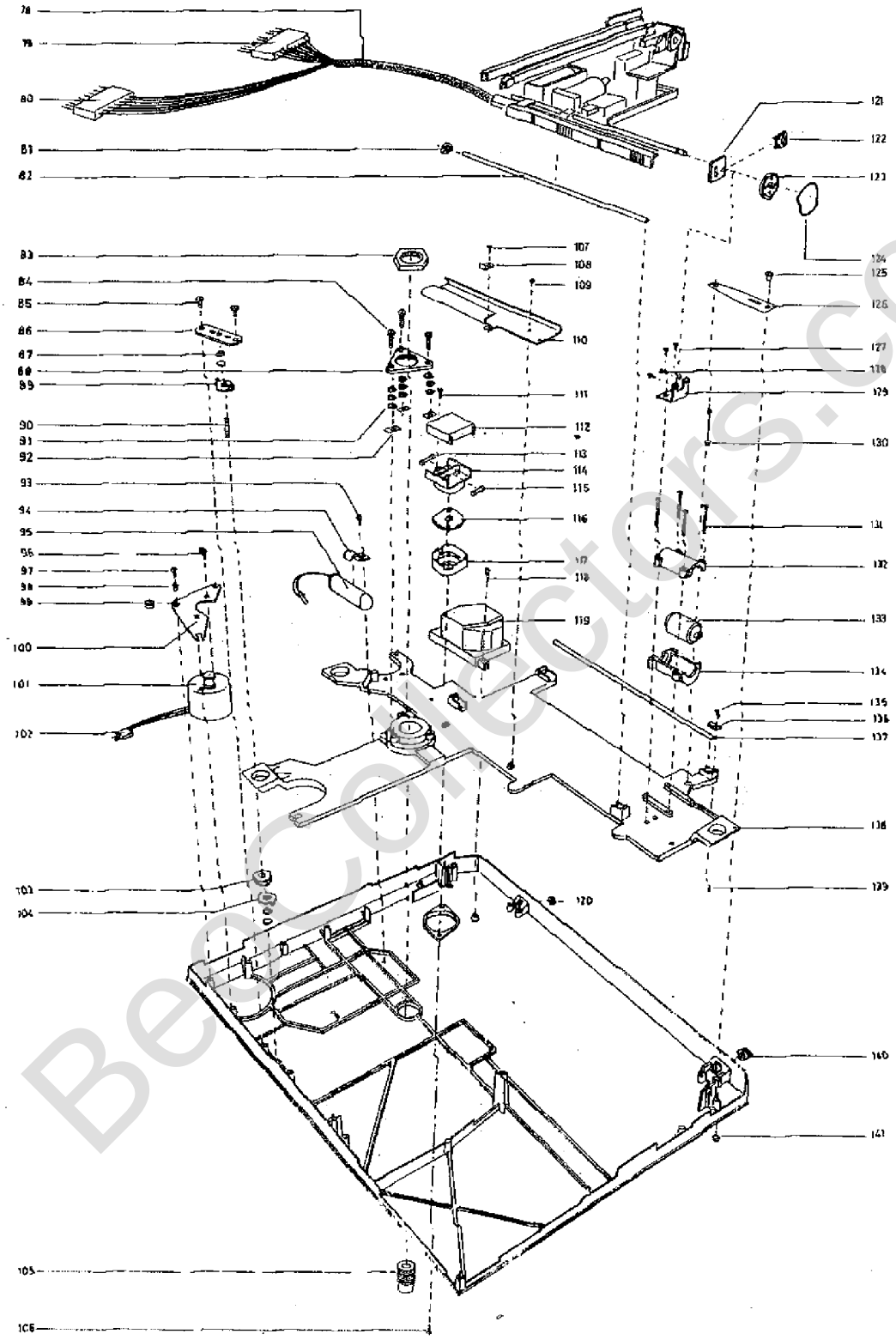


BeoCollectors.com

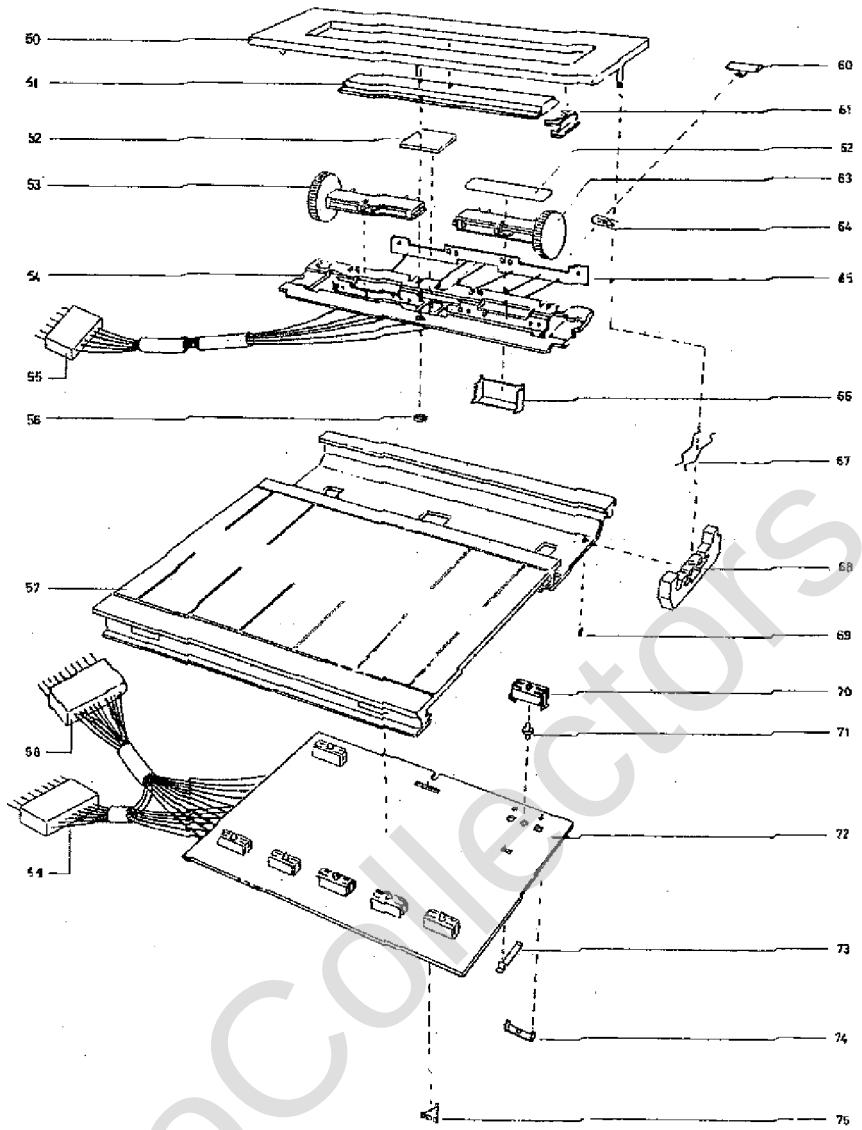


| | | | | | |
|---|---|---|---|---|---|
| 50 | 3458121 | Top plate | 61 | 3199047 | End piece |
| 51 | 3199046 | Dial | 62 | 3180621 | Sticker |
| 52 | 3164179 | Cover | 63 | 5300091 | Potentiometer |
| 53 | 5300090 | Potentiometer | 64 | 8230052 | Lamp 14V 40 mA |
| 54 | 3131085 | Housing for potentiometer | 65 | 6140376 | DC board |
| 55 | 7220057 | Housing 6 pol. without pins | 66 | 3300044 | Screen |
| | 7500076 | Contact pin | 67 | 2819096 | Spring |
| 56 | 2395034 | Spire | 68 | 3152129 | Holder |
| 57 | 8055020 | Chassis 4002 | 69 | 2072701 | Threaded DIN M3 x 4 DIN 438 |
| | 8055022 | Chassis 4004 | 70 | 3152068 | Holder |
| 58 | 7220052 | Housing 10 pol. without pins | 71 | 7500067 | Contact pin |
| 59 | 7220056 | Housing 9 pol. without pins | 72 | 8005018 | DC board 4002 |
| | 7500076 | Housing | | 8005029 | DC board 4004 |
| 60 | 3358116 | Heat sink | 73 | 7500075 | Contact spring |
| | | | 74 | 7500050 | Contact bridge |
| | | | 75 | 2816111 | Locking spring |

BeoCollectors.com

| | | |
|---|---|---|
| 78 | 6275391 | Movable wire bundle |
| 79 | 7220036 | Housing 11 pol. |
| 80 | 7220056 | Housing 9 pol. |
| | 7500076 | Housing |
| 81 | 2905045 | Bearing |
| 82 | 2830049 | Shaft |
| 83 | 2380096 | Nut |
| 84 | 2038216 | Screw 3 x 10 DIN 84 |
| 85 | 2015903 | Screw 3.5 x 9.52 |
| 86 | 3014021 | Guide |
| 87 | 2624038 | Washer |
| 88 | 2641076 | Clamp |
| 89 | 2381008 | Wing nut |
| 90 | 2993024 | Threaded pin |
| 91 | 2624027 | Spring washer |
| 92 | 2390020 | Spire, nylon |
| 93 | 2013202 | Screw 2.9 x 9.5 DIN 7981 |
| 94 | 2510030 | Clamp |
| 95 | 4200335 | El. capacitor |
| | 7500076 | Housing |
| 96 | 2036201 | Screw 2.6 x 3 DIN 84 |
| 97 | 2013202 | Screw 9.5 x 2.9 DIN 7981 |
| 98 | 2365114 | Bushing |
| 99 | 2938132 | Rubber bushing |
| 100 | 3151156 | Holder for motor |
| 101 | 8400078 | Motor |
| | 2722019 | Belt washer |
| 102 | 7220037 | Housing 3 pol. |
| | 7500076 | Housing |
| 103 | 2938099 | Rubber bushing |
| 104 | 2381007 | Wing nut |
| 105 | 2938118 | Bearing |
| 106 | 2013012 | Screw 2.9 x 13 DIN 7982 |
| 107 | 2013202 | Screw 2.9 x 9.5 DIN 7981 |
| 108 | 2514032 | Clamp |
| 109 | 2013002 | Screw 2.9 x 6.5 DIN 7982 |
| 110 | 3013017 | Guide rail |
| 111 | 2038247 | Screw 3 x 6 DIN 84 |
| 112 | 3164109 | Cover |
| 113 | 6600000 | Fuse 250 mA-T 250 V |
| | 3180607 | Label for fuse |
| 114 | 3131118 | Housing for fuse |
| 115 | 6600000 | Fuse 250 mA-T 250 V |
| 116 | 7400062 | Mains voltage switch |
| 117 | 3131050 | Housing for mains voltage switch |
| 118 | 2013202 | Screw 2.9 x 9.5 DIN 7981 |
| 119 | 8013187 | Transformer |
| 120 | 2641062 | Clamp, upper part |
| | 2641061 | Clamp, bottom part |
| 121 | 2905056 | Bearing for spindle |
| 122 | 2905055 | Bearing for spindle |
| 123 | 2722014 | Belt washer |
| | 2072920 | Threaded pin M2 x 6 DIN 551 |
| | 2380068 | Square nut M2 |
| 124 | 2732032 | Servo belt x |
| 125 | 2380108 | Special nut |
| 126 | 2816081 | Leaf spring |
| 127 | 2038208 | Screw 3 x 5 DIN 84 |
| 128 | 2038208 | Screw 3 x 5 DIN 84 |
| 129 | 2530253 | Bracket |
| 130 | 3955022 | Strop |
| 131 | 2038235 | Screw AM 3 x 25 DIN 84 |
| 132 | 3131084 | Housing for motor |
| 133 | 8400080 | Motor |
| | 3333080 | Damping for motor (foam) |
| | 3912042 | Felt washer |
| 134 | 3131084 | Housing for motor |
| 135 | 2038216 | Screw AM 3 x 10 DIN 84 |
| 136 | 2644003 | Clamp |
| 137 | 2830045 | Shaft |
| 138 | 3114105 | Chassis |
| 139 | 2072705 | Threaded pin M3 x 4 |
| 140 | 2938077 | Rubber bushing |
| 141 | 3103067 | Foot |

BeoCollectors.com

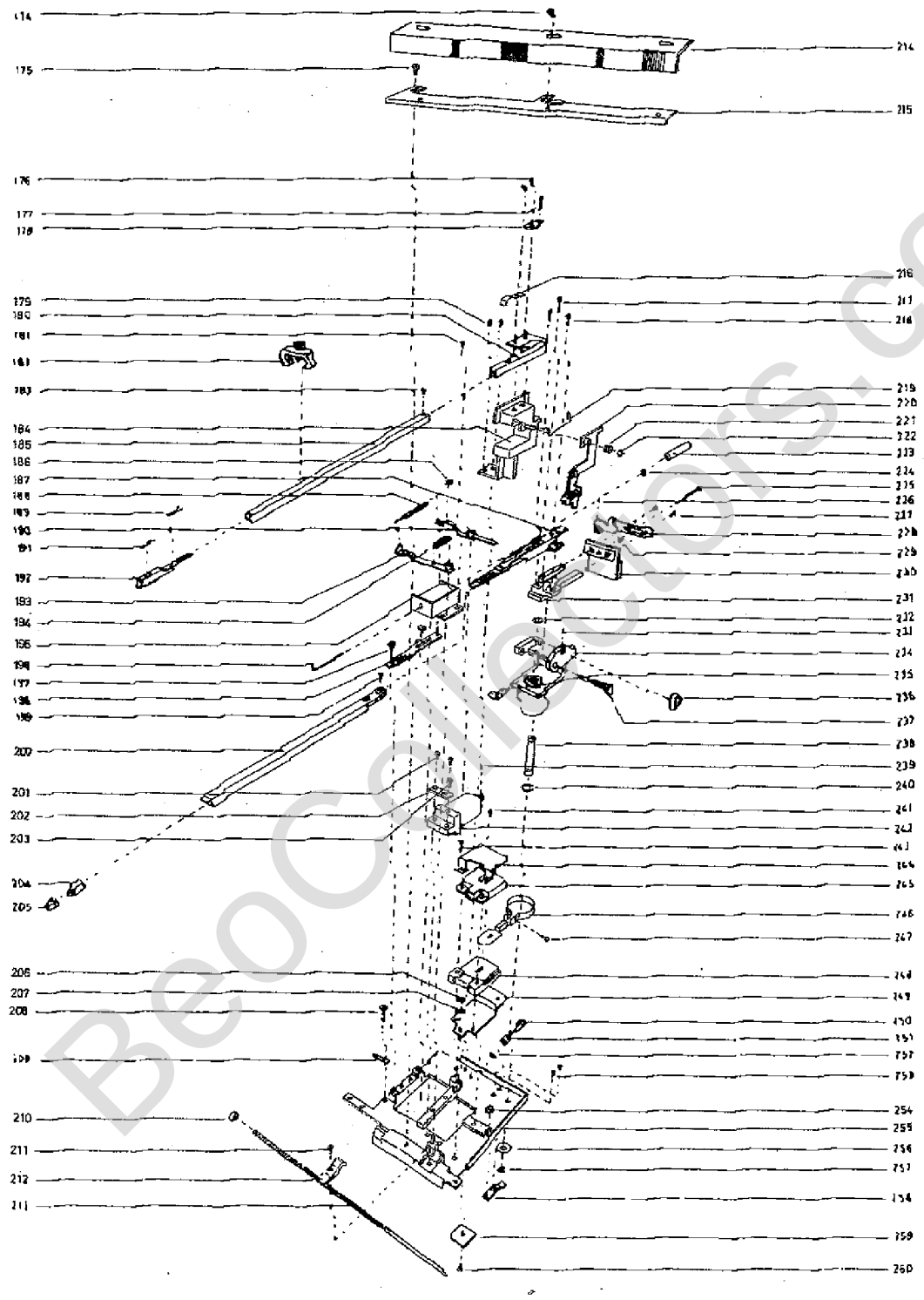


BeoCollectors.com

| | | |
|---|---|---|
| 174 | 2038952 | Screw 3 x 4 DIN 963 |
| 175 | 2038206 | Screw 3 x 4 DIN 84 |
| 176 | 2038247 | Screw AM 3 x 6 mm DIN84 |
| 177 | 2072918 | Threaded pin M3 x 15 mm |
| 178 | 3151086 | Holder |
| 179 | 2038247 | Screw AM 3 x 6 mm DIN84 |
| | 2625002 | Tooth-lock washer |
| | 7530008 | Solder tag |
| 180 | 3152076 | Holder |
| 181 | 2032208 | Screw AM 3 x 5 mm DIN84 |
| 182 | 3391407 | Transit protection |
| 183 | 2034236 | Screw AM 2 x 3 mm DIN84 |
| 184 | 3152145 | Holder for cover |
| | 3947421 | Tape |
| | 2645025 | Plate |
| 185 | 3937808 | Slave arm |
| 186 | 2390004 | Circlip UG 3 x 0.6 |
| 187 | 3152179 | Holder for pickup arm complete |
| 188 | 2810083 | Spring |
| 189 | 8760002 | Foto cell |
| 190 | 2853025 | Arm |
| 191 | 8230055 | Lamp 6V |
| 192 | 3375026 | Optics |
| 193 | 2853045 | Arm |
| 194 | 2810087 | Spring |
| 195 | 6810006 | Magnet coil |
| 196 | 2850047 | Press bar |
| 197 | 2038948 | Screw |
| 198 | 2852035 | Change lever |
| 199 | 2034236 | Screw AM 2 x 3 mm DIN84 |
| 200 | 2850077 | Pickup arm |
| 201 | 2038216 | Screw AM 3 x 10 mm DIN 84 |
| 202 | 2641075 | Clamp |
| 203 | 2072911 | Adjustment screw |
| 204 | 8954410 | Pickup MMC 4000 |
| | 3624008 | Service-kit for pickup |
| 205 | 3302230 | Cap for pickup |
| 206 | 2038948 | Screw |
| 207 | 2624021 | Washer |
| 208 | 2038208 | Screw AM 3 x 5 DIN 84 |
| 209 | 7530023 | Solder tag |
| 210 | 2389031 | Bearing nut |
| 211 | 2038208 | Screw AM 3 x 5 DIN 84 |
| 212 | 3152074 | Holder |
| 213 | 2993028 | Spindle |
| 214 | 3199049 | Dial |
| 215 | 3151139 | Holder for dial |
| 216 | 2816116 | Spring |
| 217 | 2034220 | Screw AM 2 x 12 DIN 84 |
| 218 | 2034211 | Screw AM 2 x 6 DIN 84 |
| 219 | 2819061 | Spring |
| 220 | 2851083 | Lifting arm complete |
| | 2812065 | Spring |
| | 2034219 | Screw AM 2 x 10 DIN 84 |
| 221 | 2812041 | Spring |
| 222 | 2390004 | Circlip |
| 223 | 2894029 | Armature |
| 224 | 2802023 | Washer |
| 225 | 2038233 | Screw AM 3 x 20 DIN 84 |
| 226 | 2072701 | Threaded pin M3 x 4 mm |
| 227 | 2034231 | Screw AM 2 x 4 DIN 84 |
| 228 | 2854023 | Arm |
| 229 | 2390001 | Circlip |
| 230 | 3342030 | Counterweight |
| 231 | 3152162 | Holder for counterweight |
| 232 | 2390046 | Circlip |
| 233 | 2070400 | Threaded pin M2 x 3 mm |
| 234 | 3150032 | Bearing holder |
| | 2900003 | Ball bearing |
| | 2622168 | Washer, brass |
| | 2812036 | Spring |
| | 2390047 | Circlip |
| 235 | 2548109 | Bracket |
| 236 | 2700008 | Adjustment bushing |
| 237 | 2834041 | Shaft collected |
| 238 | 2831025 | Shaft |
| 239 | 2365085 | Valve |
| 240 | 2390046 | Circlip |
| 241 | 2038206 | Screw AM 3 x 4 DIN 84 |
| 242 | 3131123 | Damper cylinder |
| 243 | 2038222 | Screw AM 3 x 14 DIN 84 |
| 244 | 2530350 | Bracket |
| 245 | 3164196 | Housing with lamp |
| 246 | 2854059 | Diaghragmarm |
| 247 | 2013203 | Screw 2.84 x 12.7 ART 4261 |
| 248 | 3131052 | Housing for foto resistor |
| | 5210004 | Foto resistor |
| 249 | 3151085 | Holder |
| 250 | 2038946 | Screw |
| 251 | 2794029 | Roller |
| 252 | 2622041 | Washer |
| 253 | 2038208 | Screw AM 3 x 5 DIN 84 |
| 254 | 2798003 | Exentrik |
| 255 | 3114068 | Chassis, slide |
| 256 | 2624028 | Thrust washer |
| 257 | 2390046 | Circlip |
| 258 | 2510086 | Bracket |
| 259 | 6140417 | PC-board |
| 260 | 2038206 | Screw AM 3 x 4 DIN 84 |

BeoDirectors.com

PARTS LIST FOR PC-BOARD 8005014/ 8005022 (MEC.)

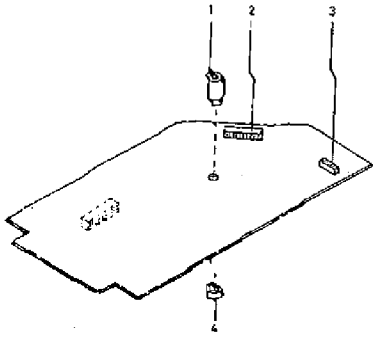

08

| | | | | | |
|---|---|---|---|---|---|
| 1 | 2938093 | Bushing, support tube | 3 | 7210026 | Socket 6 pol. |
| 2 | 7210091 | Socket 9 pol. | 4 | 2938092 | Bushing for support tube |

PARTS LIST FOR PC-BOARD 8005016/ 8005027 (MEC.)

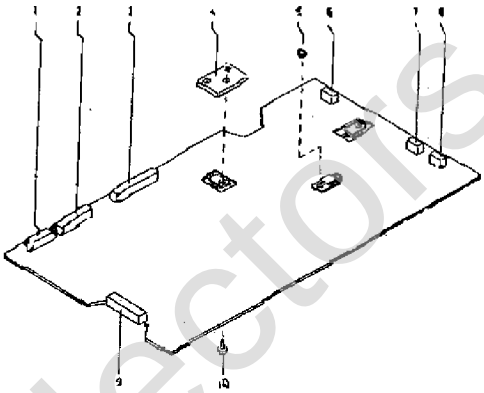

01

| | | | | | |
|---|---|---|---|---|---|
| 1 | 7210105 | Socket 6 pol. | 5 | 2365105 | Valve for transistor |
| 2 | 7210065 | Socket 8 pol. | 6 | 7210104 | Socket 4 pol. |
| 3 | 7210106 | Socket 11 pol. | 7 | 7210103 | Socket 3 pol. |
| 4 | 3558109 | Heat sink for transistor | 8 | 7210103 | Socket 3 pol. |
| | 2622248 | Mica sheet for transistor | 9 | 7210097 | Socket 10 pol. |
| | 3172074 | Insulating bushing for transistor | 10 | 2013202 | Screw for transistor |

PARTS LIST FOR PC-BOARD 8005017 (MEC.)

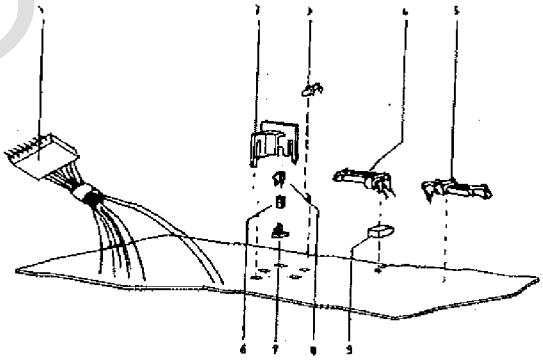

04

| | | | | | |
|---|---|---|---|---|---|
| 1 | 3110055 | Housing 8 pol. | 5 | 7400115 | Microswitch |
| | 7500076 | Contact pin | 6 | 2816130 | Leaf spring |
| 2 | 3131099 | Housing | 7 | 3454170 | Bottom piece |
| 3 | 8300229 | Light diode | | 3947518 | Tape |
| 4 | 7400115 | Micorswitch | 8 | 8340084 | Transistor |
| | | | 9 | 3103077 | Pod |

BeoCollectors.com

PARTS NOT SHOWN

| | | | |
|---|---|---|---|
| 6270193 | PU lead mounted | 3535060 | Instruction diagram |
| 6270199 | PU lead with socket/remote control | 3391384 | Outer carton |
| 7220163 | Plug 7 pol. | 3391385 | Top/bottom insert |
| 6100012 | Mains lead | 3397157 | Lid insert |
| 6270194 | Chassis cable | 3397158 | Packing, left |
| 6273771 | Lead set | 3397159 | Packing, right |

Corrections to parts list in service manual for Beogram 4002, type 5513

| Pos. | | |
|---|---|---|
| 40 | Obsolete | |
| 57 | 8055020 | Chassis, Komplet 4002 |
| 87 | 2624038 | Spring washer |
| 104 | 2624038 | Spring washer |
| 140 | Obsolete | |
| 141 | Obsolete | |
| 142 | Obsolete | |
| 143 | Obsolete | |
| 144 | Obsolete | |
| 147 | Obsolete | |
| 148 | Obsolete | |
| 150 | Obsolete | |
| | 2530350 | Bracket for housing 244 |

BeoCollectors.com

ELECTRICAL DESCRIPTION

Remote control

Some functions in the Beogram 4004 can be performed by means of the Beomaster 2400 remote control unit.
The table below shows which functions are activated when the remote control unit is operated.

| | |
|---|---|
| First time PHONO is depressed | Record player starts, slide travels in and pick-up arm lowers if there is a record on the turntable. |
| Second time PHONO is depressed | Pick-up arm rises (pause begins). |
| Third time PHONO is depressed | Pick-up arm lowers (pause ends). |
| Change to another program during playing of record | Pick-up arm rises and slide returns. |
| Change to another program during pause (pick-up arm in lifted position) | Slide does not return, and pick-up arm lowers if PHONO button is again operated. |
| Depressing STAND BY on both remote control unit and radio set | Slide will return regardless of function being performed by record player. |

The electrical circuits which process the remote control information in the Beogram 4004 consist, in principle, of three blocks: a start function, a rise/lower function, and a stop function. The circuits receive two bits of information from the Beomaster 2400 through two extra pins in the DIN connector.

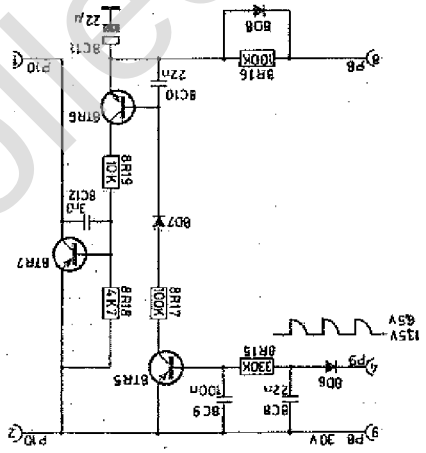


When the PHONO button is operated, pin 2 of P9 receives 13 volts and pin 4 of P9 receives approx. 6.5 volts. The emitter of 8TR5 receives 13 volts and the cathode of 8D6 receives 6.5 volts, 8TR5 is forward biased.

The collector of 8TR5 goes high and 8TR6 is forward biased throug 8R17, 8D7 and 8C11. 8TR7 is forward biased through 8R19, 8TR6 and 8C11 until 8C11 is fully charged. The collector of 8TR7 goes high, and this high level is fed to the START wire in the power supply section. The power supply turns on, slide transport starts, and the emitter of 8TR6 receives 21 volts througt 8R16, thereby locking the circuit until the slide has returned and the SO contact has been operated. When the PHONO button is released, the voltage at the cathode of 8D6 leaps back to 13.5 volts whilst the 13-volt potential at the emitter of 8TR5 is maintained.

BeoCollectors.com

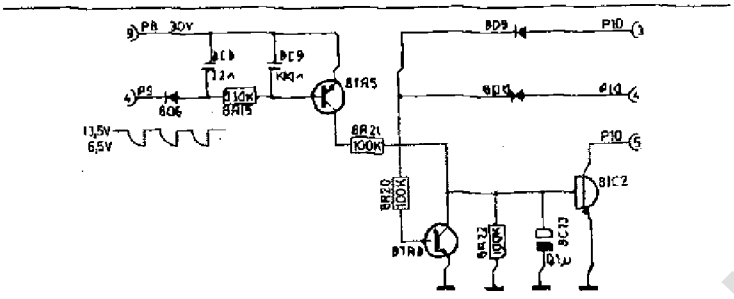


When the PHONO button is again operated, the voltage at the cathode of 8D6 again leaps to approx. 6.5 volts. 8TR5 is forward biased, the collector goes high, 8IC2 is forward biased and the collector of 8IC2 is short-circuited to chassis potential. There is a connection from the collector of 8IC2 to the rise/lowes switch on the Beogram 4004 so that the pick-up arm rises and thereafter lowers when the PHONO button is again depressed. The anode of 8D9 is connected to the START section of the electronic switch and therefore is high during inward slide transport. This causes 8D9 to be forward biased. 8TR8 will then likewise be forward biased, and the base of 8IC2 is short-circuited to chassis potential. Manual pick-up arm rise/lowering therefore cannot be performed during inward slide transport. The anode of 8D10 is similarly connected to the STOP section of the electronic switch so that manual rise/lowering cannot be performed during outward slide transport either.

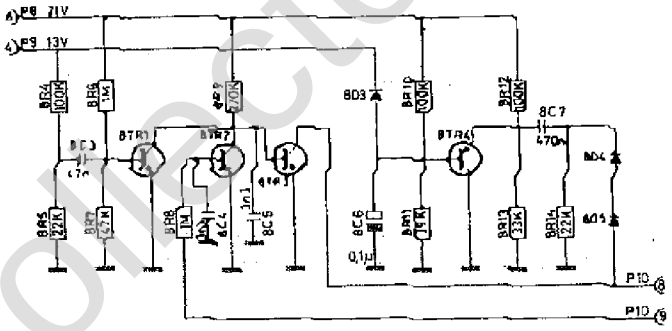


While a record is being played, 8TR2 is forward biased, the collector is low and 8TR3 reverse biased. Because of the voltage divider 8R4 - 8R5, 8C3 is charged to approx. 6 volts. When a change to another program is made on the remote control unit, the 13-volt potential at pin 4 of P9 disappears, 8C3 will discharge through 8R5 and 8R7, causing 8TR1 to be reverse biased.
The collector of 8TR1 goes high and 8TR3 is forward biased. The collector of 8TR3 is connected to the STOP contact through pin 8 of P10, and with a low level at the collector of 8TR3 the pick-up arm will rise and slide return. The base of 8TR2 is connected to the rise/lower section of the electronic switch through pin 9 of P10 so that when the pick-up arm is in its lifted position, 8TR2 is forward biased, and the base of 8TR3 is short-circuited to chassis potential. Hence, 8TR3 cannot be forward biased when the pickup arm is in its lifted position, and the slide therefore will not return if a change is made to another function on the remote control unit.
In normal operation, + 13 volts from the Beomaster 2400 is applied to the cathode of 8D3 (in the PHONO mode through 2D61 and in other program modes through 2D60). 8TR4 is reverse biased with approx. 5 volts at the emitter and 8C2 is fully charged. When the STAND BY button on the remote control unit or the radio set is operated, the + 13-volt potential from the radio set goes to 0 volts, and 8TR4 is forward biased. The emitter of 8TR4 goes low, and 8C7

BeoCollector.com

will discharge such that a negative voltage appears at the cathode of 8D4. 8D4 and 8D5 receive forward bias, and the STOP section of the electronic switch is activated, the pick-up arm rises, and the slide returns.

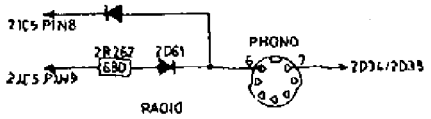


BeoCollectors.com